GENERAL

REFRIGERANT R32 INVERTER

AIR CONDITIONER

Wall mounted type

DESIGN & TECHNICAL MANUAL

INDOOR		ASHG07KGTA ASHG09KGTA ASHG12KGTA ASHG14KGTA ASHG07KGTB ASHG09KGTB ASHG12KGTB ASHG14KGTB
OUTDOOR		AOHG07KGCA AOHG09KGCA AOHG12KGCA AOHG14KGCA

FUJITSU GENERAL LIMITED

DR_AS049EG_04
2019.09.26

Notices:
- Product specifications and design are subject to change without notice for future improvement.
- For further details, please check with our authorized dealer.

Trademarks

FGLair™ is trademark of Fujitsu General Limited in the United States, other countries or both.

Google Play™ is trademark of Google Inc.

App Store® is a service mark of Apple Inc., registered in the U.S. and other countries.

Copyright © 2017, 2019 Fujitsu General Limited. All rights reserved.

CONTENTS

Part 1. INDOOR UNIT 1

1. Specifications 2

2. Dimensions 4

2-1. Models: ASHG07KGTA, ASHG09KGTA, ASHG12KGTA, ASHG14KGTA, ASHG07KGTB, ASHG09KGTB, ASHG12KGTB, and ASHG14KGTB 4

3. Wiring diagrams 6

3-1. Models: ASHG07KGTA, ASHG09KGTA, ASHG12KGTA, ASHG14KGTA, ASHG07KGTB, ASHG09KGTB, ASHG12KGTB, and ASHG14KGTB 6

4. Capacity table 7

4-1. Cooling capacity 7

4-2. Heating capacity 9

5. Fan performance 10

5-1. Air velocity distributions 10

5-2. Airflow 12

6. Operation noise (sound pressure) 16

6-1. Noise level curve 16

6-2. Sound level check point 18

7. Safety devices 19

8. External input and output 20

8-1. External input 21

8-2. External output 22

8-3. Combination of external input and output 23

8-4. Details of function 25

9. Group connection 30

10. Remote controller 31

10-1.Wireless remote controller 31

11. Function settings 33

11-1.Function settings by using remote controller 33

11-2.Custom code setting for wireless remote controller 40

12. Accessories 41

12-1.Models: ASHG07KGTA, ASHG09KGTA, ASHG12KGTA, ASHG14KGTA, ASHG07KGTB, ASHG09KGTB, ASHG12KGTB, and ASHG14KGTB 41

13. Optional parts 42

13-1.Controllers 42

13-2.Others 42

CONTENTS (continued)

Part 2. OUTDOOR UNIT 43

1. Specifications 44

2. Dimensions 45

2-1. Models: AOHG07KGCA, AOHG09KGCA, AOHG12KGCA, and AOHG14KGCA 45

3. Installation space 46

3-1. Models: AOHG07KGCA, AOHG09KGCA, AOHG12KGCA, and AOHG14KGCA 46

4. Refrigerant circuit 49

4-1. Models: AOHG07KGCA, AOHG09KGCA, AOHG12KGCA, and AOHG14KGCA 49

5. Wiring diagrams 50

5-1. Models: AOHG07KGCA, AOHG09KGCA, AOHG12KGCA, and AOHG14KGCA 50

6. Capacity compensation rate for pipe length and height difference 51

6-1. Models: AOHG07KGCA, AOHG09KGCA, AOHG12KGCA, and AOHG14KGCA 51

7. Additional charge calculation 52

7-1. Models: AOHG07KGCA and AOHG09KGCA 52

7-2. Models: AOHG12KGCA and AOHG14KGCA 52

8. Airflow 53

8-1. Model: AOHG07KGCA 53

8-2. Model: AOHG09KGCA 53

8-3. Model: AOHG12KGCA 53

8-4. Model: AOHG14KGCA 54

9. Operation noise (sound pressure) 55

9-1. Noise level curve 55

9-2. Sound level check point 57

10. Electrical characteristics 58

11. Safety devices 59

12. Accessories 60

12-1.Models: AOHG07KGCA, AOHG09KGCA, AOHG12KGCA, and AOHG14KGCA 60

Part 1. INDOOR UNIT

WALL MOUNTED TYPE:

ASHG07KGTA	ASHG07KGTB
ASHG09KGTA	ASHG09KGTB
ASHG12KGTA	ASHG12KGTB
ASHG14KGTA	ASHG14KGTB

1. Specifications

Type					Wall mounted			
					Inverter heat pump			
Model name					ASHG07KGTA ASHG07KGTB	ASHG09KGTA ASHG09KGTB	ASHG12KGTA ASHG12KGTB	ASHG14KGTA ASHG14KGTB
Power supply					230 V ~ 50 Hz			
Available voltage range					198—264 V			
Capacity	Cooling	Rated		kW	2.00	2.50	3.40	4.20
				Btu/h	6,800	8,500	11,600	14,300
		Min.—Max.		kW	0.9—3.2	0.9—3.4	0.9—4.1	0.9—4.5
				Btu/h	3,100—10,900	3,100—11,600	3,100—14,000	3,100—15,400
	Heating	Rated		kW	2.50	2.80	4.00	5.40
				Btu/h	8,500	9,500	13,600	18,400
		Min.—Max.		kW	0.9—5.2	0.9—5.4	0.9—6.1	0.9—6.4
				Btu/h	3,100—17,700	3,100—18,400	3,100—20,800	3,100—21,800
Input power	Cooling	Rated		kW	0.400	0.555	0.805	1.175
		Min.—Max.			0.25—0.95	0.25—1.04	0.25—1.29	0.25—1.46
	Heating	Rated			0.500	0.560	0.910	1.350
		Min.—Max.			0.25—1.58	0.25—1.72	0.25—1.89	0.25—2.06
	Fan	HIGH		W	22.9	26.9	26.6	32.5
		MED			15.8	16.9	17.3	19.6
		LOW			10.8	10.8	11.8	12.5
		QUIET			7.6	7.6	9.0	9.1
Current	Cooling	Rated		A	2.3	3.0	4.3	5.3
	Heating				2.8	3.5	4.8	6.4
EER	Cooling			kW/kW	5.00	4.50	4.22	3.57
COP	Heating				5.00	5.00	4.40	4.00
Sensible capacity	Cooling			kW	1.2	1.6	2.2	3.2
Power factor	Cooling			%	76	80	81	96
	Heating				78	70	82	92
Moisture removal				L/h (pints/h)	1.0 (1.76)	1.3 (2.288)	1.8 (3.168)	2.1 (3.696)
Maximum operating current *1	Cooling			A	6.5	6.5	6.5	9.0
	Heating				9.0	9.0	9.0	10.5
Fan	Airflow rate	Cooling	HIGH	m^3/h	650	700	700	770
			MED		540	560	560	600
			LOW		430	430	430	450
			QUIET		270	270	250	280
		Heating	HIGH		720	750	770	800
			MED		580	610	640	660
			LOW		460	470	520	520
			QUIET		330	330	310	340
	Type × Q'ty				Cross flow fan × 1			
	Motor output			W	22	24	27	30
Sound pressure level *2	Cooling	HIGH		dB (A)	38	40	40	43
		MED			33	34	35	36
		LOW			29	29	30	30
		QUIET			19	19	19	20
	Heating	HIGH			41	42	42	44
		MED			35	36	38	39
		LOW			31	31	33	33
		QUIET			21	21	21	24
Heat exchanger type	Dimensions (H × W × D)			mm	Main1: 210 × 670 × 26.6 Main2: 112 × 670 × 20		Main1: 210 × 670 × 26.6 Main2: 112 × 670 × 20 Sub: 84 × 670 × 13.3	
	Fin pitch				Man1: 1.2, Main2: 1.1		Man1: 1.2, Main2: 1.1, Sub: 1.4	
	Rows × Stages				Main1: 2 × 10, Main2: 2 × 7		Main1: 2 × 10, Main2: 2 × 7, Sub: 1 × 4	
	Pipe type				Copper tube			
	Fin type				Aluminum			
Enclosure	Material				Polystyrene			
	Color				White + Pearl white (painted) Approximate color of Munsell N 9.25/			
Dimensions (H × W × D)	Net			mm	270 × 834 × 215			
	Gross				277 × 914 × 332			
Weight	Net			kg	10.0			
	Gross				12.5		13.0	
Connection pipe	Size	Liquid		mm (in)	Ø 6.35 (Ø 1/4)			
		Gas			Ø 9.52 (Ø 3/8)			
	Method				Flare			
Drain hose	Material				PP+LLDPE			
	Size			mm	Ø 13.8 (I.D.), Ø 15.8 to Ø 16.7 (O.D.)			
Operation range	Cooling			°C	18 to 32			
				%RH	80 or less			
	Heating			°C	16 to 30			
Remote controller type					Wireless (Wired, Mobile app*3 [FGLair™] [option])			

NOTES:

- Specifications are based on the following conditions:
  - Cooling: Indoor temperature of 27 °CDB/19 °CWB, and outdoor temperature of 35 °CDB/24 °CWB.
  - Heating: Indoor temperature of 20 °CDB/15 °CWB, and outdoor temperature of 7 °CDB/6 °CWB.
  - Pipe length: 5 m, Height difference: 0 m. (Between outdoor unit and indoor unit.)
- Protective function might work when using it outside the operation range.
- *1: Maximum current is maximum value when operated within the operation range.
- *2: Sound pressure level:
  - Measured values in manufacturer's anechoic chamber.
  - Because of the surrounding sound environment, the sound levels measured in actual installation conditions might be higher than the specified values here.
- *3: Available on Google Play™ store or on App Store®. Optional WLAN adapter is also required. For details, refer to the setting manual.

Specifications for ErP Lot10							
Model name				**ASHG07KGTA ASHG07KGTB**	**ASHG09KGTA ASHG09KGTB**	**ASHG12KGTA ASHG12KGTB**	**ASHG14KGTA ASHG14KGTB**
Energy efficiency class	Cooling			A^{+++}			A^{++}
	Heating (Average)			A^{+++}			A^{+}
Pdesign	Cooling		kW	2.0 (35 °C)	2.5 (35 °C)	3.4 (35 °C)	4.2 (35 °C)
	Heating (Average)			2.3 (-10 °C)	2.4 (-10 °C)	2.5 (-10 °C)	4.0 (-10 °C)
SEER	Cooling		kWh/kWh	8.52	8.52	8.51	7.11
SCOP	Heating (Average)			5.12	5.11	5.10	4.31
Annual energy consumption	QCE		kWh/a	82	103	140	207
	QHE (Average)			628	658	685	1,298
Sound power level	Cooling	HIGH	dB (A)	54	55	56	57
	Heating			56	57	58	59

WALL MOUNTED
ASHG07-14KGT

2. Dimensions

2-1. Models: ASHG07KGTA, ASHG09KGTA, ASHG12KGTA, ASHG14KGTA, ASHG07KGTB, ASHG09KGTB, ASHG12KGTB, and ASHG14KGTB

Unit: mm

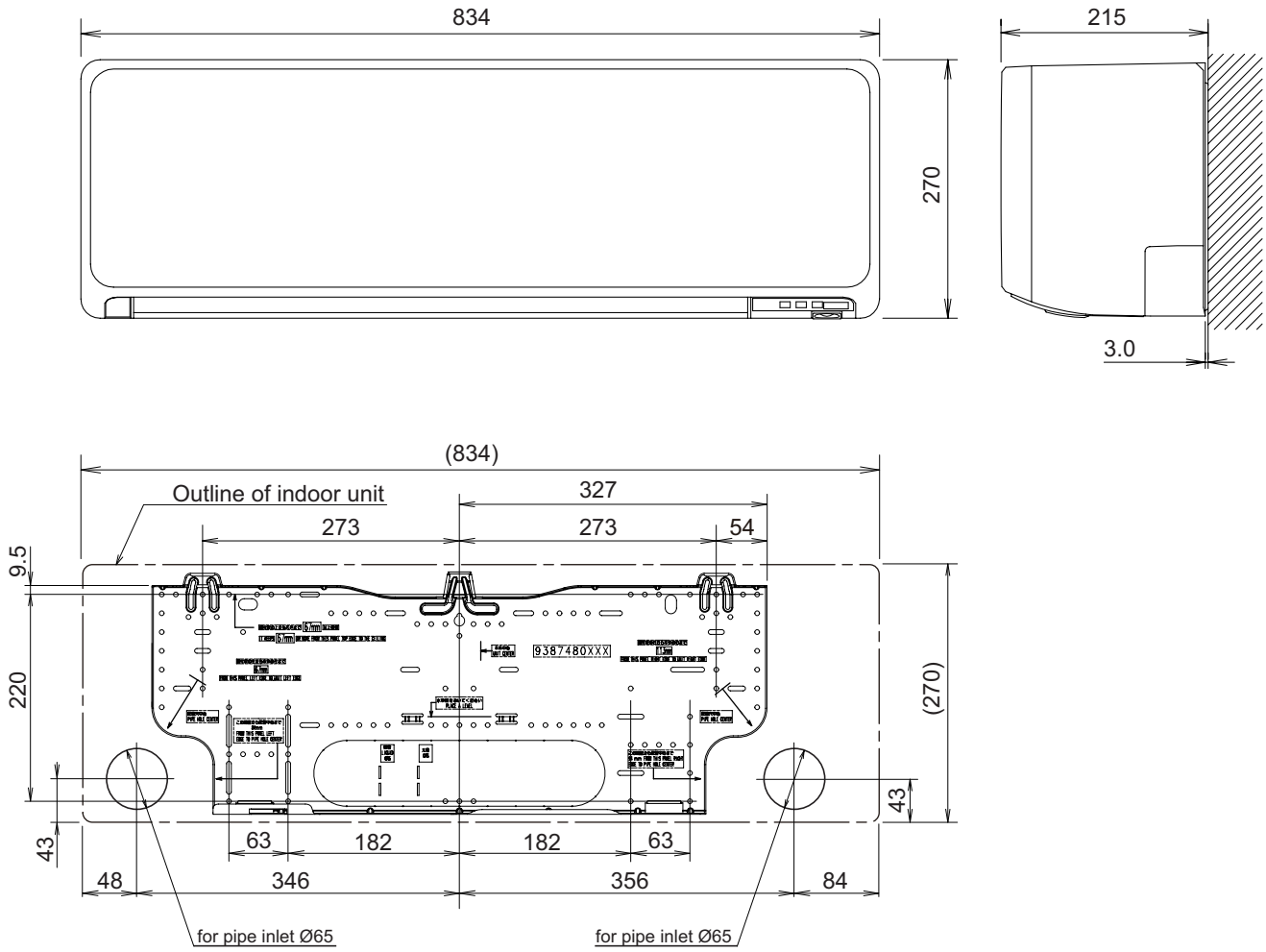

WALL MOUNTED
ASHG07-14KGT

■ Installation space requirement

Provide sufficient installation space for product safety.

Unit: mm

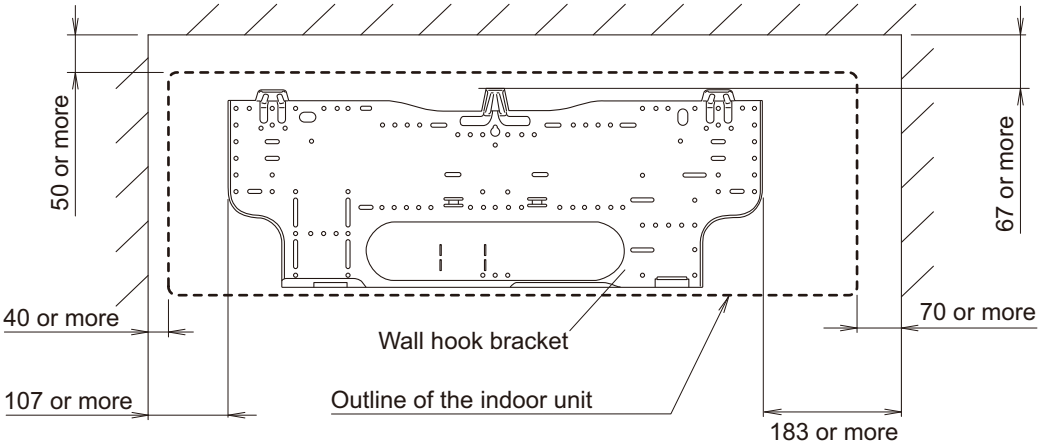

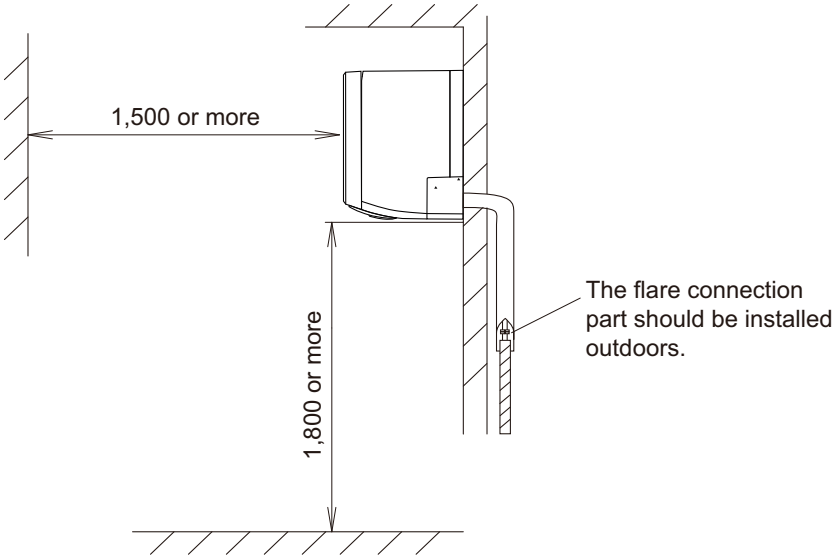

3. Wiring diagrams

3-1. Models: ASHG07KGTA, ASHG09KGTA, ASHG12KGTA, ASHG14KGTA, ASHG07KGTB, ASHG09KGTB, ASHG12KGTB, and ASHG14KGTB

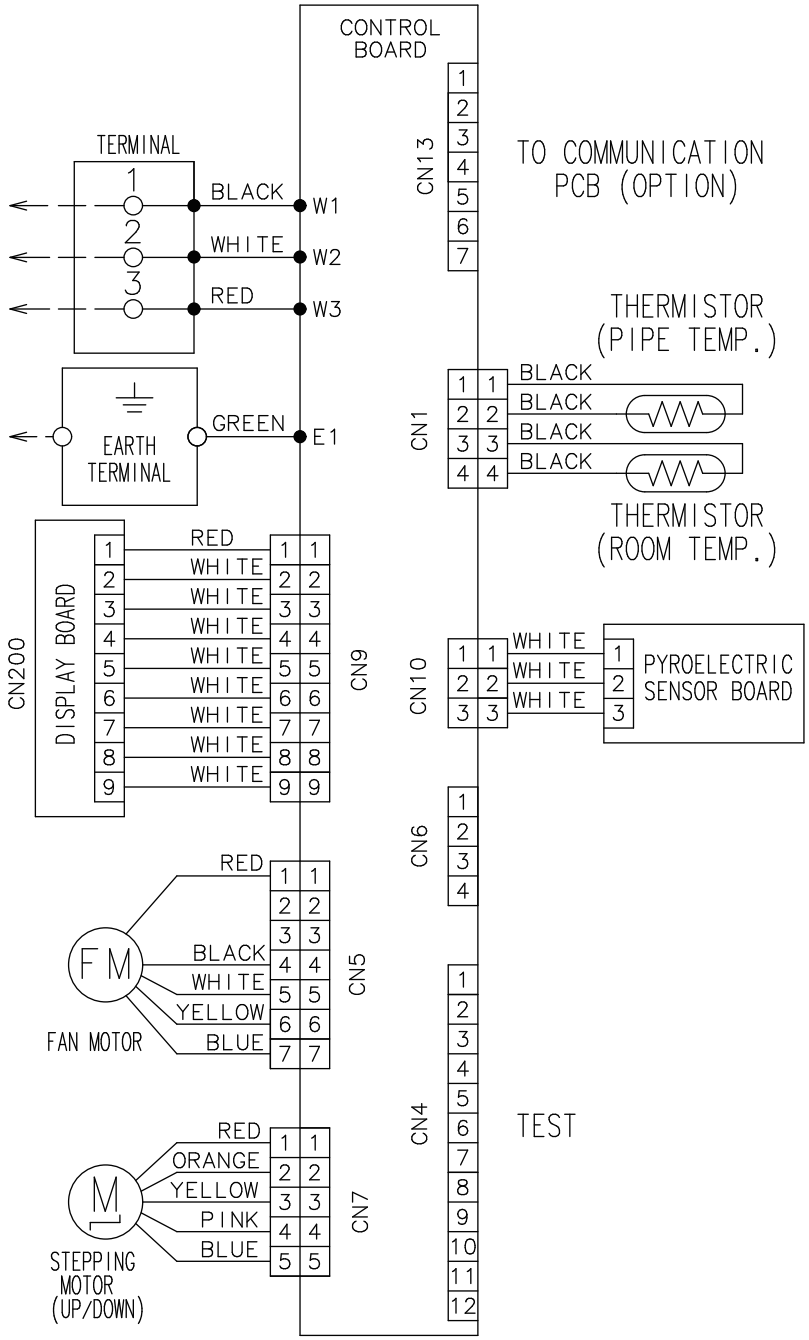

4. Capacity table

Capacity tables show each of following values calculated based on the outdoor temperature and the indoor temperature, under given Airflow Rate (AFR):

For cooling capacity: Total Capacity (TC), Sensible Heat Capacity (SHC), and Input Power (IP)
For heating capacity: Total Capacity (TC) and Input Power (IP)

4-1. Cooling capacity

■ Models: ASHG07KGTA and ASHG07KGTB

AFR	m^3/h	650

		Indoor temperature																				
	°CDB	18			21			23			25			27			29			32		
	°CWB	12			15			16			18			19			21			23		
Outdoor temperature	°CDB	TC	SHC	IP	TC	SHC	IP	TC	SHC	IP	TC	SHC	IP	TC	SHC	IP	TC	SHC	IP	TC	SHC	IP
		kW			kW			kW			kW			kW			kW			kW		
	-10	2.29	2.01	0.13	2.48	2.11	0.14	2.72	2.26	0.14	2.85	2.28	0.14	2.95	2.34	0.14	3.17	2.39	0.15	3.37	2.48	0.14
	0	2.25	2.07	0.24	2.43	2.13	0.23	2.57	2.21	0.23	2.68	2.22	0.23	2.79	2.27	0.22	2.96	2.31	0.22	3.18	2.43	0.21
	5	2.29	2.08	0.14	2.47	2.14	0.13	2.61	2.23	0.13	2.73	2.23	0.13	2.84	2.28	0.13	3.01	2.33	0.13	3.23	2.45	0.12
	10	2.25	2.01	0.19	2.43	2.07	0.19	2.57	2.15	0.19	2.68	2.16	0.18	2.79	2.21	0.18	2.96	2.25	0.18	3.18	2.36	0.17
	15	2.21	2.05	0.25	2.38	2.11	0.25	2.51	2.19	0.25	2.63	2.20	0.24	2.73	2.25	0.24	2.90	2.30	0.23	3.11	2.41	0.23
	20	2.20	2.04	0.31	2.38	2.10	0.30	2.51	2.18	0.30	2.62	2.18	0.29	2.72	2.23	0.28	2.89	2.28	0.28	3.10	2.39	0.27
	25	2.08	2.01	0.37	2.25	2.07	0.36	2.37	2.15	0.36	2.48	2.16	0.35	2.58	2.21	0.34	2.73	2.25	0.34	2.93	2.36	0.33
	30	2.00	1.97	0.43	2.16	2.03	0.41	2.28	2.11	0.41	2.39	2.12	0.40	2.48	2.18	0.40	2.63	2.23	0.39	2.82	2.34	0.38
	35	1.95	1.92	0.48	2.10	1.98	0.47	2.22	2.05	0.47	2.31	2.06	0.46	2.35	2.19	0.45	2.55	2.24	0.44	2.74	2.35	0.43
	40	1.82	1.77	0.54	1.96	1.82	0.52	2.07	1.89	0.53	2.16	1.90	0.51	2.25	2.13	0.50	2.39	2.18	0.50	2.56	2.28	0.48
	46	1.69	1.67	0.57	1.83	1.80	0.56	1.95	1.93	0.57	2.03	2.02	0.57	2.14	2.09	0.56	2.24	2.12	0.55	2.42	2.17	0.54

■ Models: ASHG09KGTA and ASHG09KGTB

AFR	m^3/h	700

		Indoor temperature																				
	°CDB	18			21			23			25			27			29			32		
	°CWB	12			15			16			18			19			21			23		
Outdoor temperature	°CDB	TC	SHC	IP	TC	SHC	IP	TC	SHC	IP	TC	SHC	IP	TC	SHC	IP	TC	SHC	IP	TC	SHC	IP
		kW			kW			kW			kW			kW			kW			kW		
	-10	2.75	2.40	0.18	2.98	2.51	0.19	3.26	2.69	0.20	3.42	2.72	0.20	3.54	2.79	0.20	3.81	2.85	0.21	4.04	2.95	0.20
	0	2.71	2.46	0.33	2.92	2.54	0.32	3.08	2.63	0.32	3.22	2.64	0.31	3.35	2.70	0.31	3.55	2.76	0.31	3.81	2.89	0.30
	5	2.75	2.48	0.19	2.97	2.55	0.18	3.13	2.65	0.19	3.27	2.66	0.18	3.41	2.72	0.18	3.61	2.78	0.17	3.87	2.91	0.17
	10	2.71	2.40	0.27	2.92	2.47	0.26	3.08	2.56	0.26	3.22	2.57	0.26	3.35	2.63	0.25	3.55	2.69	0.25	3.81	2.82	0.24
	15	2.65	2.44	0.35	2.86	2.52	0.34	3.02	2.61	0.34	3.15	2.62	0.33	3.28	2.68	0.33	3.48	2.74	0.32	3.73	2.87	0.32
	20	2.64	2.43	0.42	2.85	2.50	0.41	3.01	2.59	0.41	3.14	2.60	0.40	3.27	2.66	0.40	3.47	2.72	0.39	3.72	2.85	0.38
	25	2.50	2.40	0.51	2.70	2.47	0.50	2.85	2.56	0.50	2.97	2.57	0.49	3.09	2.63	0.48	3.28	2.69	0.47	3.52	2.82	0.46
	30	2.41	2.35	0.59	2.60	2.42	0.58	2.74	2.51	0.58	2.86	2.52	0.56	2.98	2.60	0.55	3.16	2.66	0.54	3.39	2.79	0.53
	35	2.33	2.29	0.67	2.52	2.35	0.65	2.66	2.44	0.65	2.78	2.45	0.64	2.89	2.61	0.63	3.06	2.67	0.62	3.29	2.80	0.60
	40	2.18	2.11	0.75	2.36	2.17	0.73	2.49	2.26	0.73	2.60	2.27	0.71	2.70	2.54	0.70	2.86	2.60	0.69	3.07	2.72	0.67
	46	2.03	2.01	0.79	2.20	2.15	0.79	2.34	2.30	0.79	2.44	2.41	0.79	2.57	2.49	0.78	2.69	2.52	0.76	2.90	2.59	0.75

■ Models: ASHG12KGTA and ASHG12KGTB

AFR	m^3/h	700

		Indoor temperature																				
	°CDB	18			21			23			25			27			29			32		
	°CWB	12			15			16			18			19			21			23		
Outdoor temperature	°CDB	TC	SHC	IP	TC	SHC	IP	TC	SHC	IP	TC	SHC	IP	TC	SHC	IP	TC	SHC	IP	TC	SHC	IP
		kW			kW			kW			kW			kW			kW			kW		
	-10	3.09	2.54	0.32	3.45	2.78	0.38	3.82	2.96	0.44	4.00	3.01	0.45	4.13	3.09	0.40	4.41	3.14	0.45	4.62	3.21	0.44
	0	3.30	2.76	0.52	3.57	2.87	0.54	3.76	2.93	0.51	3.94	3.01	0.52	4.04	3.05	0.53	4.37	3.15	0.52	4.68	3.23	0.54
	5	3.27	2.75	0.29	3.54	2.85	0.30	3.72	2.91	0.29	3.91	2.99	0.29	4.00	3.03	0.30	4.33	3.13	0.29	4.64	3.22	0.30
	10	3.23	2.72	0.38	3.49	2.83	0.40	3.68	2.89	0.37	3.86	2.97	0.38	3.95	3.01	0.39	4.28	3.10	0.38	4.58	3.19	0.39
	15	3.17	2.69	0.46	3.43	2.80	0.48	3.61	2.86	0.46	3.79	2.93	0.47	3.88	2.98	0.47	4.20	3.07	0.47	4.50	3.15	0.48
	20	3.10	2.65	0.54	3.35	2.76	0.57	3.53	2.81	0.54	3.71	2.89	0.55	3.79	2.93	0.56	4.11	3.02	0.55	4.40	3.11	0.56
	25	3.01	2.61	0.62	3.26	2.71	0.65	3.43	2.76	0.61	3.60	2.84	0.62	3.69	2.88	0.63	3.99	2.97	0.62	4.27	3.05	0.64
	30	2.91	2.55	0.69	3.15	2.65	0.72	3.31	2.70	0.68	3.48	2.78	0.69	3.56	2.82	0.71	3.85	2.90	0.69	4.13	2.98	0.72
	35	2.79	2.48	0.76	3.02	2.58	0.79	3.18	2.63	0.75	3.34	2.71	0.76	3.42	2.75	0.77	3.70	2.83	0.76	3.96	2.91	0.79
	40	2.66	2.41	0.82	2.88	2.51	0.86	3.03	2.56	0.81	3.18	2.63	0.82	3.25	2.66	0.84	3.52	2.75	0.82	3.77	2.82	0.85
	46	2.45	2.40	0.91	2.62	2.51	0.88	2.77	2.60	0.91	2.85	2.62	0.88	2.90	2.59	0.90	3.10	2.72	0.92	3.32	2.75	0.92

■ Models: ASHG14KGTA and ASHG14KGTB

AFR	m^3/h	770

		Indoor temperature																				
	°CDB	18			21			23			25			27			29			32		
	°CWB	12			15			16			18			19			21			23		
Outdoor temperature	°CDB	TC	SHC	IP	TC	SHC	IP	TC	SHC	IP	TC	SHC	IP	TC	SHC	IP	TC	SHC	IP	TC	SHC	IP
		kW			kW			kW			kW			kW			kW			kW		
	-10	3.35	2.71	0.35	3.74	2.97	0.42	4.14	3.16	0.48	4.34	3.22	0.49	4.48	3.30	0.44	4.78	3.35	0.49	5.01	3.43	0.49
	0	3.57	2.95	0.57	3.87	3.06	0.60	4.07	3.13	0.56	4.27	3.21	0.57	4.37	3.26	0.58	4.73	3.36	0.57	5.07	3.45	0.59
	5	3.54	2.93	0.32	3.84	3.05	0.33	4.04	3.11	0.31	4.24	3.20	0.32	4.34	3.24	0.32	4.70	3.34	0.32	5.03	3.43	0.33
	10	3.50	2.91	0.42	3.79	3.02	0.43	3.98	3.09	0.41	4.18	3.17	0.42	4.28	3.21	0.42	4.63	3.31	0.42	4.96	3.41	0.43
	15	3.44	2.88	0.51	3.72	2.99	0.53	3.91	3.05	0.50	4.11	3.13	0.51	4.21	3.18	0.52	4.55	3.28	0.51	4.88	3.37	0.53
	20	3.36	2.83	0.60	3.63	2.94	0.62	3.82	3.01	0.59	4.02	3.09	0.60	4.11	3.13	0.61	4.45	3.23	0.60	4.77	3.32	0.62
	25	3.26	2.78	0.68	3.53	2.89	0.71	3.72	2.95	0.67	3.90	3.03	0.68	3.99	3.07	0.69	4.32	3.17	0.68	4.63	3.26	0.71
	30	3.15	2.72	0.76	3.41	2.83	0.79	3.59	2.89	0.75	3.77	2.97	0.76	3.86	3.01	0.77	4.18	3.10	0.76	4.47	3.19	0.79
	35	3.02	2.65	0.83	3.27	2.76	0.87	3.44	2.81	0.82	3.62	2.89	0.84	3.70	2.93	0.85	4.01	3.02	0.84	4.29	3.11	0.86
	40	2.88	2.58	0.90	3.12	2.68	0.94	3.28	2.73	0.89	3.45	2.81	0.90	3.53	2.85	0.92	3.82	2.93	0.91	4.09	3.01	0.94
	46	2.65	2.56	1.00	2.84	2.68	0.96	3.01	2.78	1.00	3.08	2.80	0.97	3.15	2.76	0.98	3.36	2.90	1.01	3.59	2.94	1.01

4-2. Heating capacity

NOTE: Values mentioned in the table are calculated based on the maximum capacity.

■ Models: ASHG07KGTA and ASHG07KGTB

AFR	m^3/h	720

			Indoor temperature									
			16		18		20		22		24	
	°CDB	°CWB	TC	IP	TC	IP	TC	IP	TC	IP	TC	IP
			kW		kW		kW		kW		kW	
Outdoor temperature	-15	-16	3.08	1.30	3.11	1.35	3.09	1.38	3.06	1.42	3.04	1.43
	-10	-11	3.62	1.39	3.66	1.44	3.63	1.46	3.60	1.51	3.58	1.52
	-5	-7	4.10	1.44	4.13	1.49	4.10	1.52	4.06	1.56	4.04	1.57
	0	-2	4.50	1.48	4.54	1.53	4.43	1.53	4.36	1.56	4.35	1.59
	5	3	4.86	1.45	4.94	1.51	4.82	1.51	4.74	1.55	4.73	1.57
	7	6	5.24	1.48	5.33	1.58	5.20	1.58	5.12	1.62	5.11	1.64
	10	8	5.39	1.51	5.49	1.61	5.28	1.59	5.27	1.65	5.26	1.67
	15	10	5.29	1.31	5.38	1.40	5.16	1.40	5.17	1.43	5.16	1.45
	20	15	5.54	1.25	5.54	1.23	5.38	1.24	5.26	1.23	5.11	1.25
	24	18	5.69	1.18	5.69	1.17	5.53	1.17	5.40	1.16	5.26	1.18

■ Models: ASHG09KGTA and ASHG09KGTB

AFR	m^3/h	750

			Indoor temperature									
			16		18		20		22		24	
	°CDB	°CWB	TC	IP	TC	IP	TC	IP	TC	IP	TC	IP
			kW		kW		kW		kW		kW	
Outdoor temperature	-15	-16	3.20	1.42	3.23	1.47	3.21	1.50	3.18	1.54	3.16	1.55
	-10	-11	3.76	1.51	3.80	1.57	3.77	1.59	3.74	1.64	3.72	1.65
	-5	-7	4.26	1.56	4.29	1.62	4.26	1.65	4.22	1.70	4.19	1.71
	0	-2	4.67	1.61	4.72	1.67	4.61	1.66	4.53	1.70	4.52	1.73
	5	3	5.04	1.58	5.13	1.65	5.01	1.65	4.93	1.68	4.92	1.71
	7	6	5.44	1.61	5.53	1.72	5.40	1.72	5.31	1.76	5.30	1.79
	10	8	5.60	1.64	5.70	1.76	5.48	1.73	5.47	1.79	5.46	1.82
	15	10	5.49	1.42	5.59	1.52	5.36	1.52	5.37	1.55	5.35	1.58
	20	15	5.75	1.36	5.75	1.34	5.58	1.35	5.46	1.34	5.31	1.36
	24	18	5.91	1.29	5.91	1.27	5.74	1.28	5.61	1.27	5.46	1.29

■ Models: ASHG12KGTA and ASHG12KGTB

AFR	m^3/h	770

			Indoor temperature									
			16		18		20		22		24	
	°CDB	°CWB	TC	IP	TC	IP	TC	IP	TC	IP	TC	IP
			kW		kW		kW		kW		kW	
Outdoor temperature	-15	-16	3.40	1.39	3.39	1.36	3.36	1.36	3.34	1.37	3.30	1.40
	-10	-11	4.02	1.41	3.93	1.43	3.83	1.46	3.72	1.48	3.60	1.52
	-5	-7	4.60	1.51	4.50	1.54	4.39	1.57	4.26	1.60	4.12	1.63
	0	-2	5.29	1.63	5.17	1.66	5.04	1.69	4.89	1.72	4.73	1.76
	5	3	6.06	1.77	5.93	1.79	5.78	1.83	5.61	1.87	5.43	1.91
	7	6	6.40	1.82	6.26	1.85	6.10	1.89	5.92	1.93	5.73	1.97
	10	8	6.94	1.92	6.78	1.94	6.61	1.98	6.42	2.02	6.21	2.07
	15	10	6.33	1.58	6.19	1.60	6.03	1.63	5.86	1.66	5.67	1.70
	20	15	6.61	1.38	6.46	1.41	6.29	1.43	6.11	1.46	5.91	1.50
	24	18	6.89	1.32	6.75	1.40	6.50	1.37	6.14	1.36	5.66	1.39

■ Models: ASHG14KGTA and ASHG14KGTB

AFR	m^3/h	800

			Indoor temperature									
			16		18		20		22		24	
	°CDB	°CWB	TC	IP	TC	IP	TC	IP	TC	IP	TC	IP
			kW		kW		kW		kW		kW	
Outdoor temperature	-15	-16	3.57	1.51	3.56	1.49	3.52	1.48	3.51	1.50	3.46	1.53
	-10	-11	4.22	1.53	4.12	1.56	4.02	1.59	3.90	1.62	3.77	1.66
	-5	-7	4.83	1.65	4.72	1.67	4.60	1.71	4.47	1.74	4.33	1.78
	0	-2	5.55	1.78	5.42	1.81	5.29	1.84	5.13	1.88	4.97	1.92
	5	3	6.36	1.93	6.22	1.96	6.06	1.99	5.89	2.03	5.70	2.08
	7	6	6.72	1.99	6.57	2.02	6.40	2.06	6.21	2.10	6.01	2.15
	10	8	7.28	2.09	7.11	2.12	6.93	2.16	6.73	2.20	6.52	2.26
	15	10	6.64	1.72	6.49	1.74	6.33	1.78	6.15	1.81	5.95	1.86
	20	15	6.93	1.51	6.77	1.53	6.60	1.56	6.41	1.59	6.20	1.63
	24	18	7.22	1.44	7.08	1.53	6.82	1.50	6.44	1.48	5.94	1.52

5. Fan performance

5-1. Air velocity distributions

■ Models: ASHG07KGTA, ASHG09KGTA, ASHG07KGTB, and ASHG09KGTB

Measuring conditions	Fan speed	Operation mode
	HIGH	FAN

Top view
Vertical airflow direction louver: Up
Horizontal airflow direction louver: Center

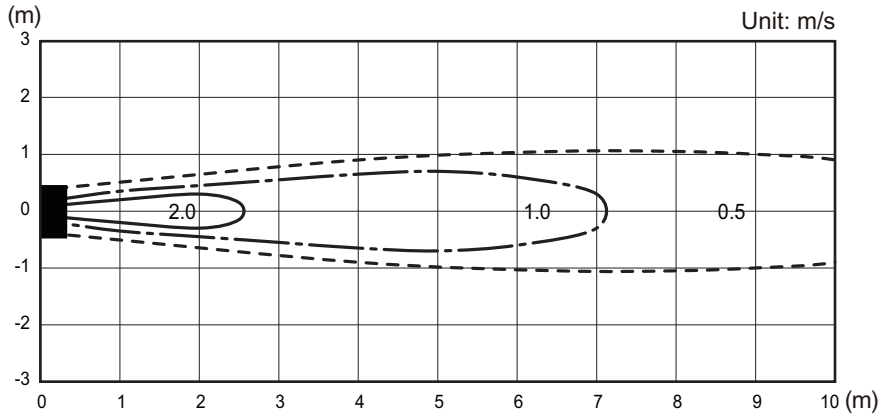

Top view
Vertical airflow direction louver: Up
Horizontal airflow direction louver: Left & Right

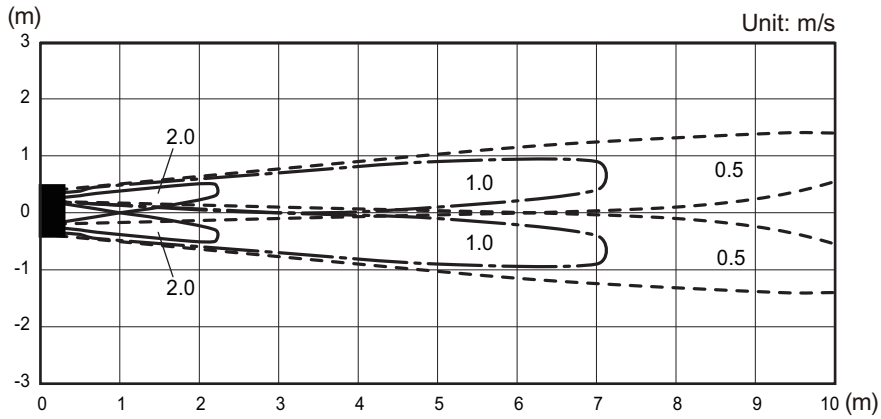

Side view
Vertical airflow direction louver: Up
Horizontal airflow direction louver: Center

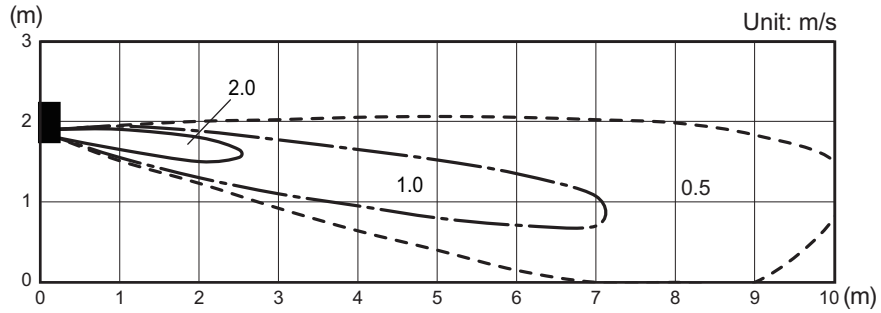

Side view
Vertical airflow direction louver: Down
Horizontal airflow direction louver: Center

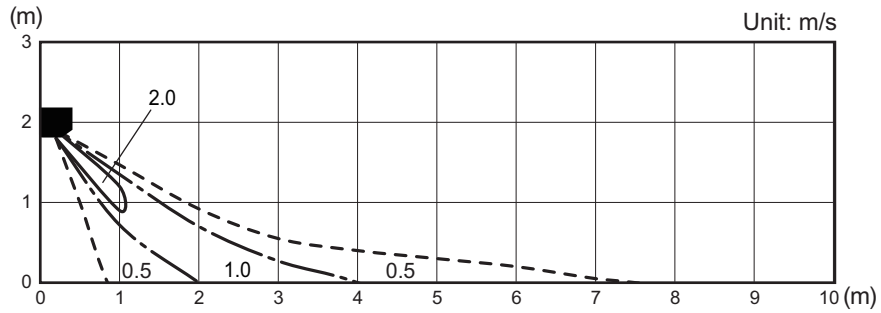

■ Models: ASHG12KGTA, ASHG14KGTA, ASHG12KGTB, and ASHG14KGTB

Measuring conditions	Fan speed	Operation mode
	HIGH	FAN

Top view
Vertical airflow direction louver: Up
Horizontal airflow direction louver: Center

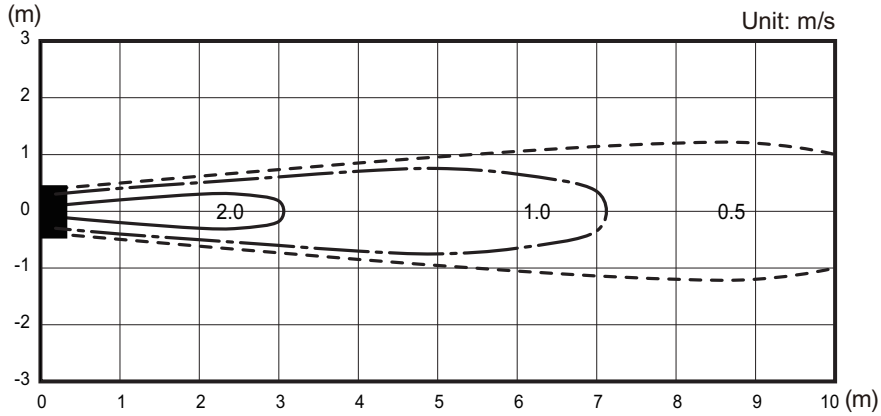

Top view
Vertical airflow direction louver: Up
Horizontal airflow direction louver: Left & Right

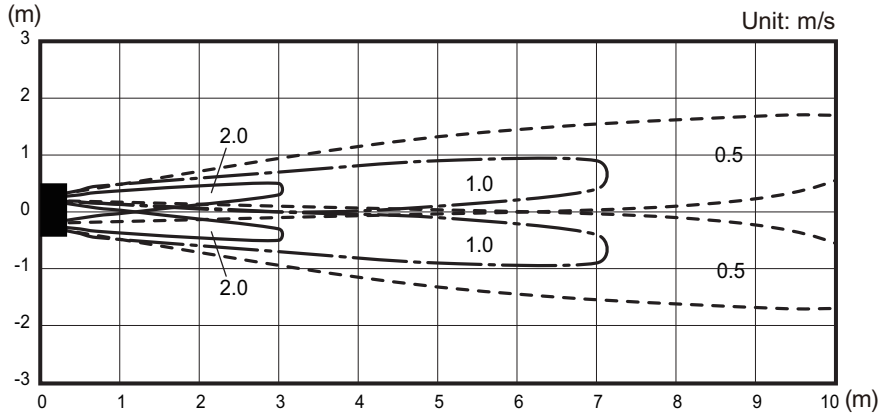

Side view
Vertical airflow direction louver: Up
Horizontal airflow direction louver: Center

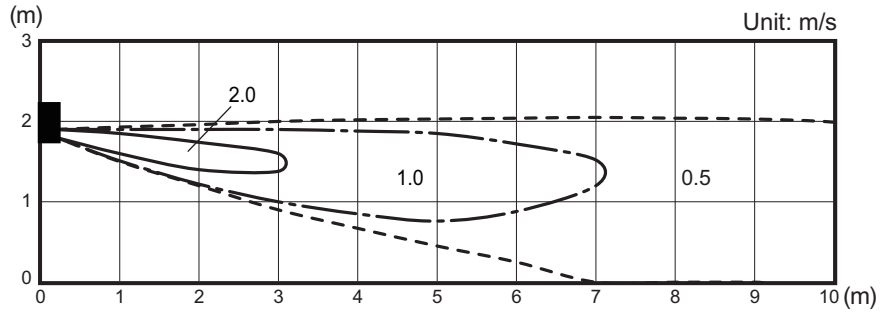

Side view
Vertical airflow direction louver: Down
Horizontal airflow direction louver: Center

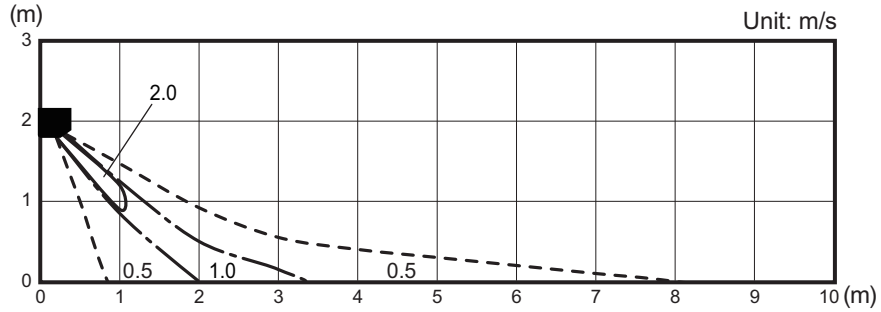

WALL MOUNTED
ASHG07-14KGT

5-2. Airflow

■ Models: ASHG07KGTA and ASHG07KGTB

● Cooling

Fan speed	Airflow	
HIGH	m^3/h	650
	l/s	181
	CFM	383
MED	m^3/h	540
	l/s	150
	CFM	318
LOW	m^3/h	430
	l/s	119
	CFM	253
QUIET	m^3/h	270
	l/s	75
	CFM	159

● Heating

Fan speed	Airflow	
HIGH	m^3/h	720
	l/s	200
	CFM	424
MED	m^3/h	580
	l/s	161
	CFM	341
LOW	m^3/h	460
	l/s	128
	CFM	271
QUIET	m^3/h	330
	l/s	92
	CFM	194

WALL MOUNTED
ASHG07-14KGT

■ Models: ASHG09KGTA and ASHG09KGTB

● Cooling

Fan speed	Airflow	
HIGH	m^3/h	700
	l/s	194
	CFM	412
MED	m^3/h	560
	l/s	156
	CFM	330
LOW	m^3/h	430
	l/s	119
	CFM	253
QUIET	m^3/h	270
	l/s	75
	CFM	159

● Heating

Fan speed	Airflow	
HIGH	m^3/h	750
	l/s	208
	CFM	441
MED	m^3/h	610
	l/s	169
	CFM	359
LOW	m^3/h	470
	l/s	131
	CFM	277
QUIET	m^3/h	330
	l/s	92
	CFM	194

WALL MOUNTED
ASHG07-14KGT

■ Models: ASHG12KGTA and ASHG12KGTB

● Cooling

Fan speed	Airflow	
HIGH	m^3/h	700
	l/s	194
	CFM	412
MED	m^3/h	560
	l/s	156
	CFM	330
LOW	m^3/h	430
	l/s	119
	CFM	253
QUIET	m^3/h	250
	l/s	69
	CFM	147

● Heating

Fan speed	Airflow	
HIGH	m^3/h	770
	l/s	214
	CFM	453
MED	m^3/h	640
	l/s	178
	CFM	377
LOW	m^3/h	520
	l/s	144
	CFM	306
QUIET	m^3/h	310
	l/s	86
	CFM	182

WALL MOUNTED
ASHG07-14KGT

■ Models: ASHG14KGTA and ASHG14KGTB

● Cooling

Fan speed	Airflow	
HIGH	m^3/h	770
	l/s	214
	CFM	453
MED	m^3/h	600
	l/s	167
	CFM	353
LOW	m^3/h	450
	l/s	125
	CFM	265
QUIET	m^3/h	280
	l/s	78
	CFM	165

● Heating

Fan speed	Airflow	
HIGH	m^3/h	800
	l/s	222
	CFM	471
MED	m^3/h	660
	l/s	183
	CFM	388
LOW	m^3/h	520
	l/s	144
	CFM	306
QUIET	m^3/h	340
	l/s	94
	CFM	200

6. Operation noise (sound pressure)

6-1. Noise level curve

■ Models: ASHG07KGTA and ASHG07KGTB

● Cooling

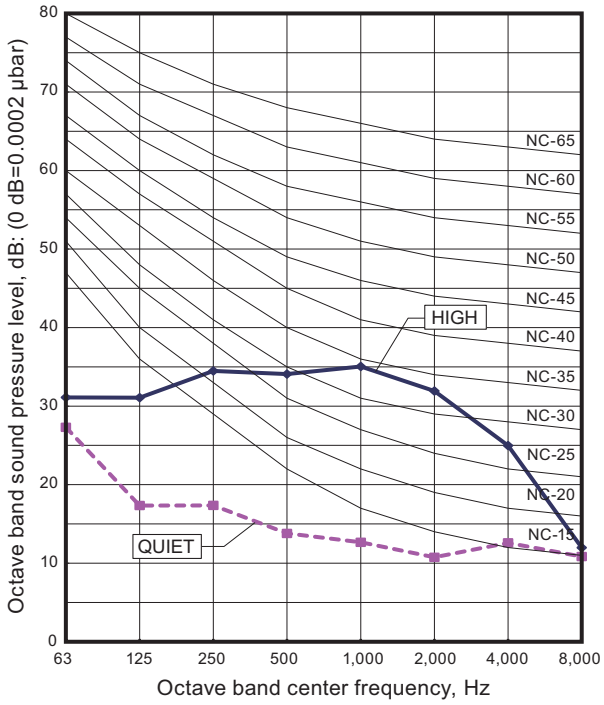

● Heating

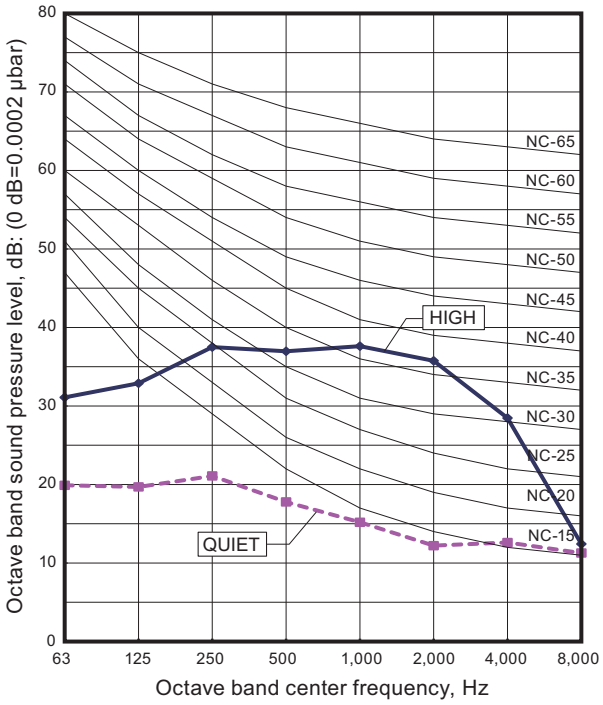

■ Models: ASHG09KGTA and ASHG09KGTB

● Cooling

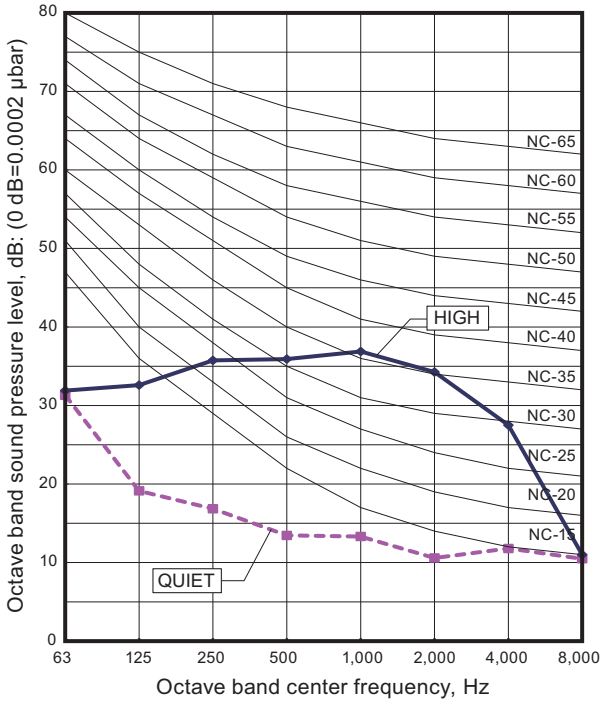

● Heating

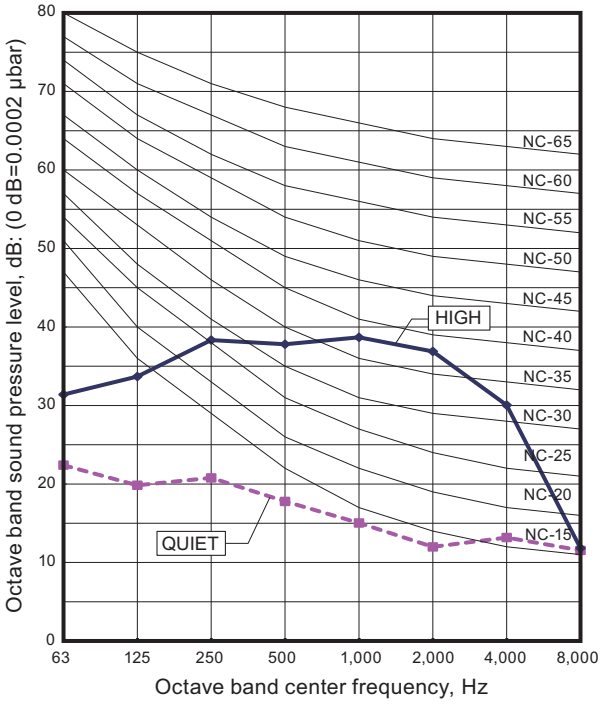

■ Models: ASHG12KGTA and ASHG12KGTB

● Cooling

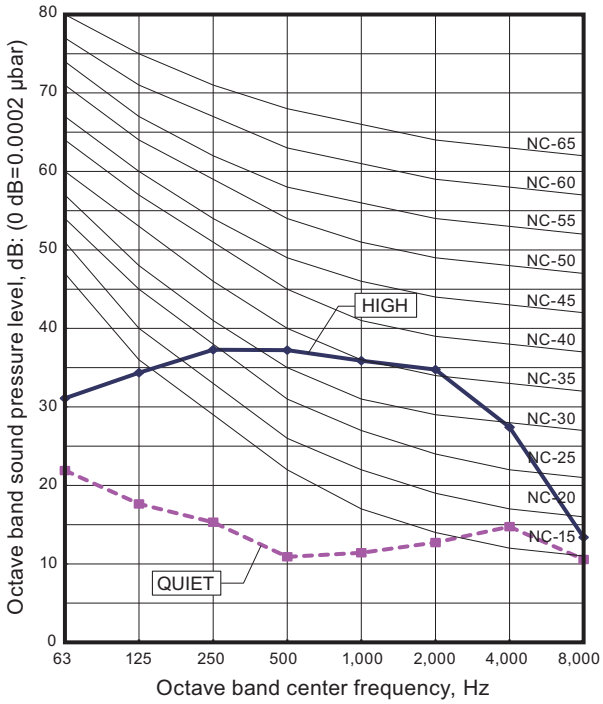

● Heating

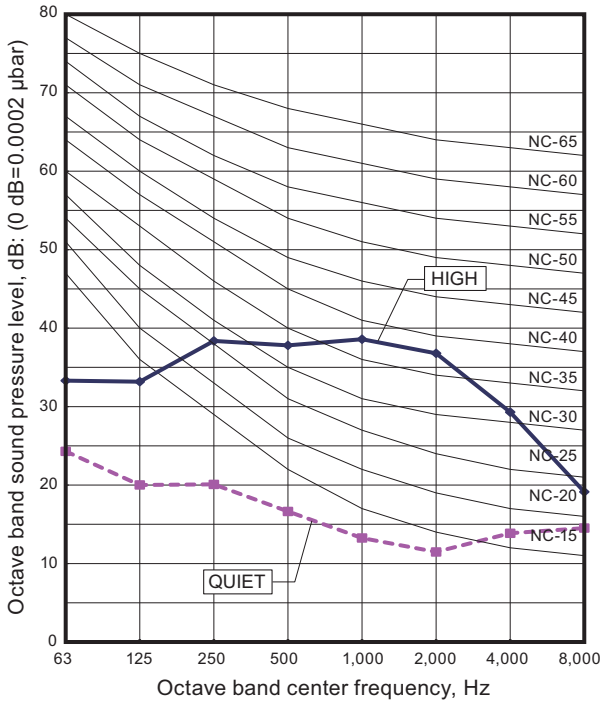

■ Models: ASHG14KGTA and ASHG14KGTB

● Cooling

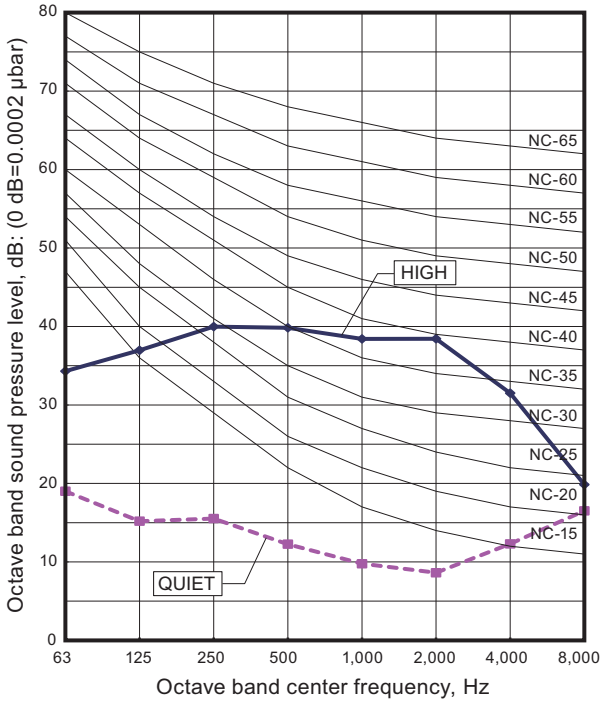

● Heating

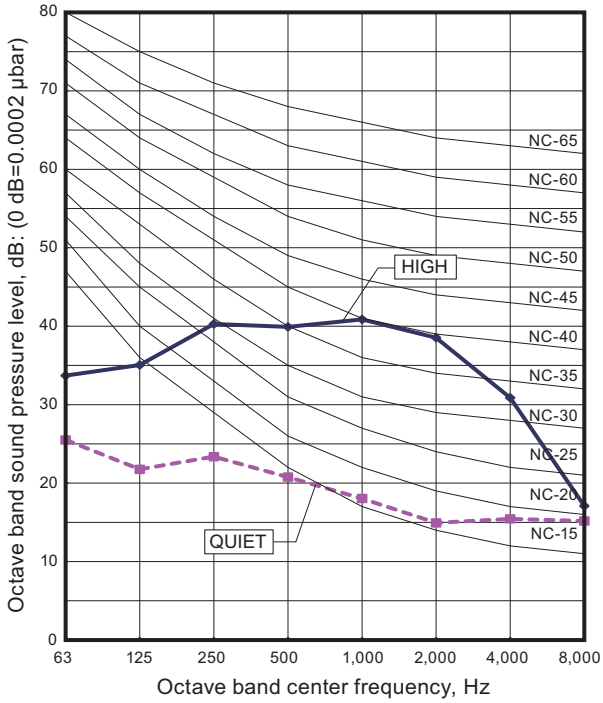

WALL MOUNTED
ASHG07-14KGT

6-2. Sound level check point

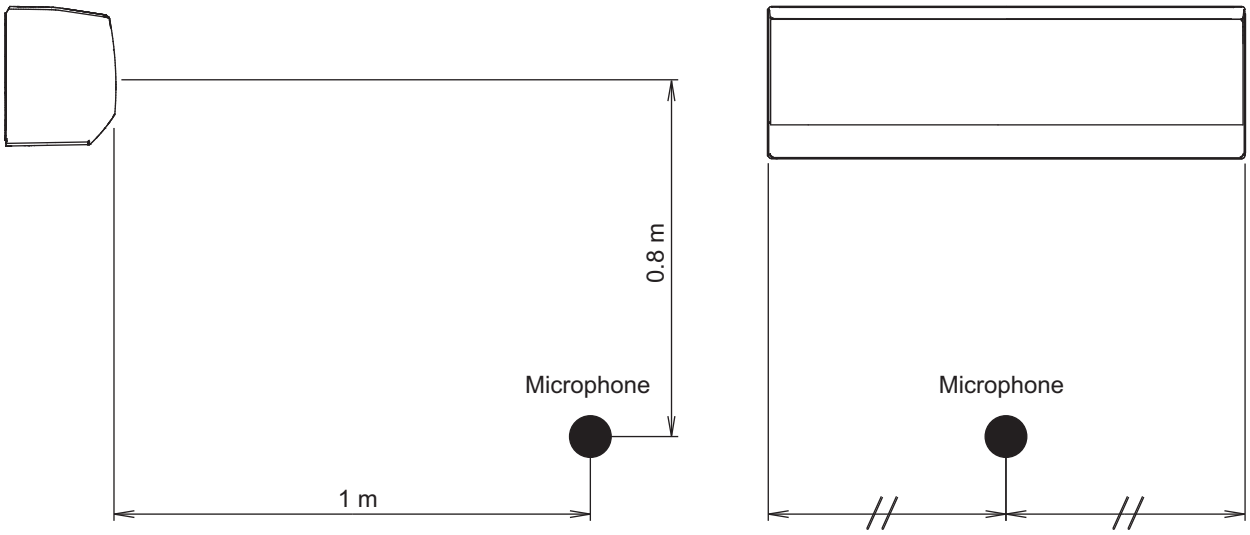

NOTE: Detailed shape of the actual indoor unit might be slightly different from the one illustrated above.

WALL MOUNTED
ASHG07-14KGT

7. Safety devices

Type of protection	Protection form		Model	
			ASHG07KGTA ASHG07KGTB	ASHG09KGTA ASHG09KGTB
Circuit protection	Current fuse (PCB*)		250 V, 3.15 A	
Fan motor protection	Thermistor protection	Activate	More than 85 °C Fan motor speed down	
		Reset	85 °C or less Fan motor speed recover	

Type of protection	Protection form		Model	
			ASHG12KGTA ASHG12KGTB	ASHG14KGTA ASHG14KGTB
Circuit protection	Current fuse (PCB*)		250 V, 3.15 A	
Fan motor protection	Power IC thermal shutdown protection	Activate	125±25 °C Fan motor stop	
		Reset	110^{+25}_{-20}°C Fan motor restart	

*PCB: Printed Circuit Board

8. External input and output

External input and output PCB

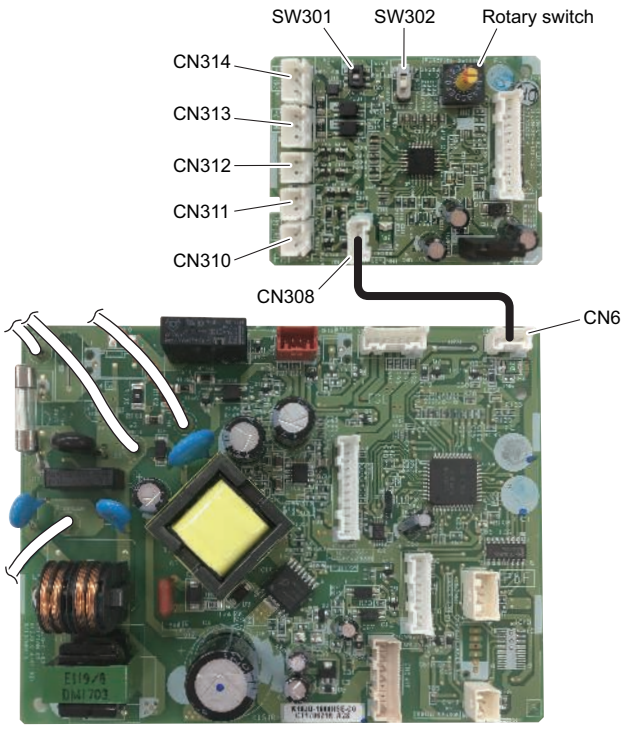

Indoor unit PCB

PCB	External input	External output	Connector	Input select	Input signal
External input and output (UTY-XCSXZ2)	Operation/Stop	-	CN313/ CN314	Dry contact/ Apply voltage	Edge/Pulse
	Forced stop				
	Forced thermostat off		CN313		Edge
	-	Operation status	CN310	-	-
		Error status	CN311		
		Indoor unit fan operation status	CN312		

8-1. External input

With using external input function, some functions on this product can be controlled from an external device.

- “Operation/Stop” mode or "Forced stop" mode can be selected with function setting of indoor unit.
- A twisted pair cable should be used. Maximum length of cable is 150 m.
- The wire connection should be separate from the power cable line.

■ External input and output PCB

The indoor unit Operation/Stop can be set by using the input connector on the PCB.

- **Input select:**
  Use either one of these types of connectors according to the application. (Both types of connectors cannot be used simultaneously.)
  – Dry contact
  In case of internal power supply, set the slide switch of SW301 to "NON VOL" side.

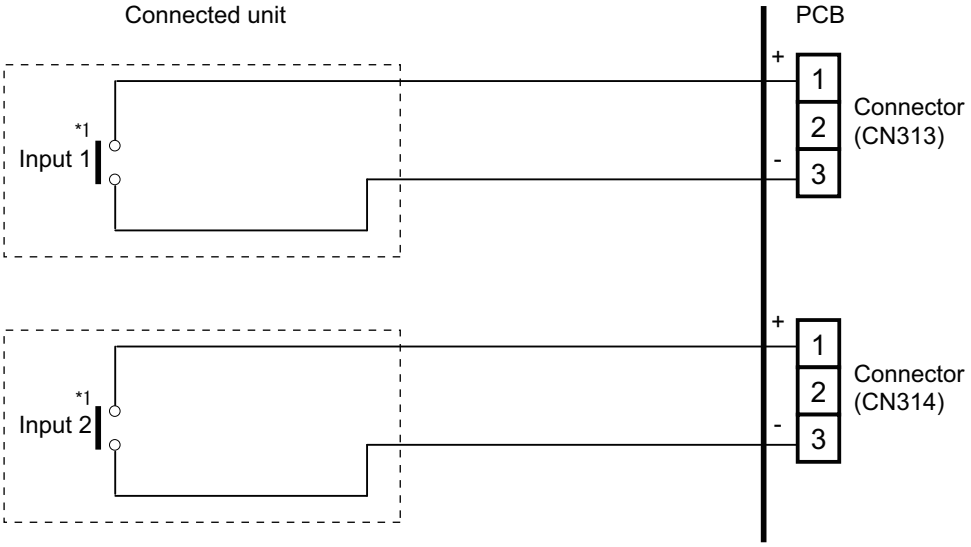

*1: The switches can be used on the following condition: DC 12 V to 24 V, 1 mA to 15 mA.

  – Apply voltage
  In case of external power supply, set the slide switch of SW301 to "VOL" side.

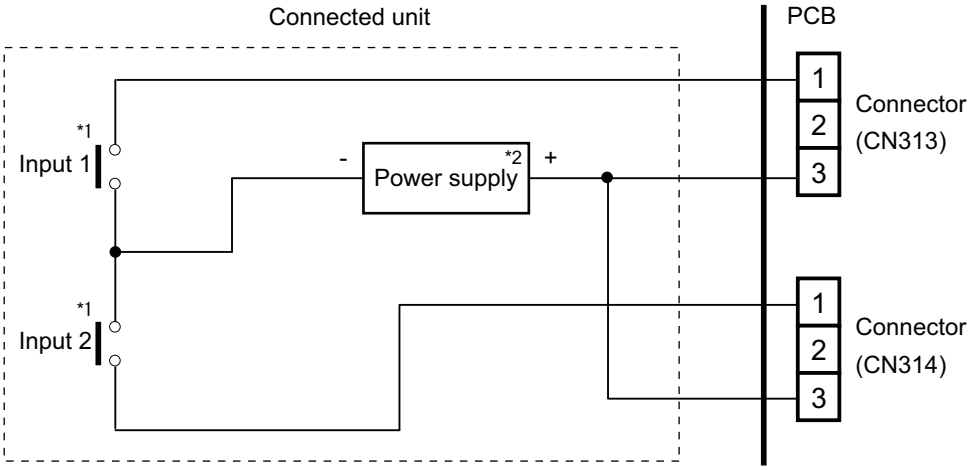

*1: The switches can be used on the following condition: DC 12 V to 24 V, 1 mA to 15 mA.
*2: Make the power supply DC 12 to 24 V, 10 mA or more.

WALL MOUNTED
ASHG07-14KGT

8-2. External output

Use an external output cable with appropriate external dimension, depending on the number of cables to be installed.

■ External input and output PCB

- A twisted pair cable (22AWG) should be used. Maximum length of cable is 25 m.
- Output voltage: High DC 12 V±2 V, Low 0 V.
- Permissible current: 50 mA
- For details, refer to "Combination of external input and output" on page 23.

- **When indicator or other components are connected directly:**
  Example: Function setting 60 is set to "00".

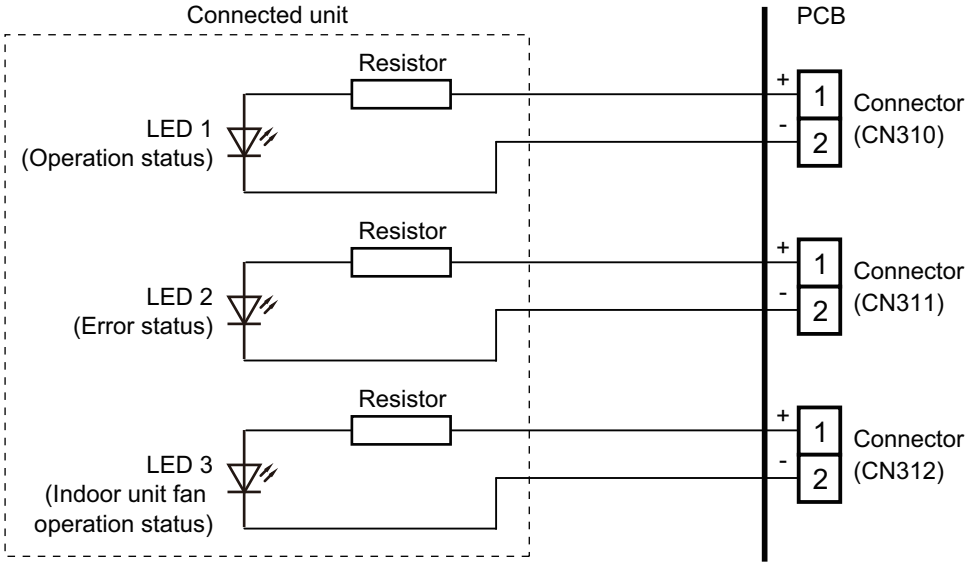

- **When connecting with a device equipped with a power supply:**
  Example: Function setting 60 is set to "00".

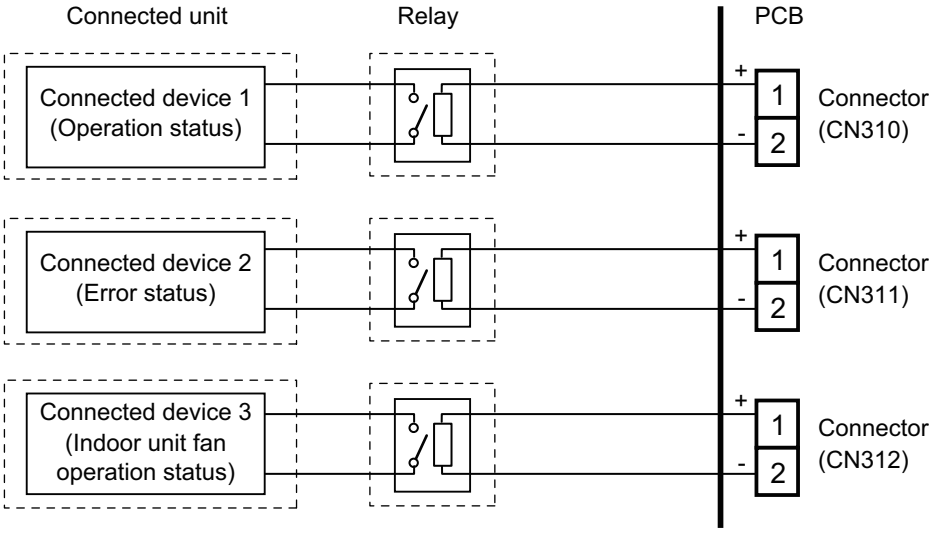

WALL MOUNTED
ASHG07-14KGT

8-3. Combination of external input and output

By combining the function setting of the indoor unit and rotary switch setting of the External input and output PCB, you can select various combinations of functions.

Combination examples of external input and output are as follows:

Mode	Function setting	External input and output PCB (Rotary SW)	External input		
			External input and output PCB		
			CN313	CN314	Signal type
0-1	60-00	1	Operation/Stop	Not available	Edge
			Operation	Stop	Pulse
0-2	60-00	2	Forced Thermostat OFF	Not available	Edge
1—8	60-01 to 60-08	3 - 9, A	(Setting prohibited)		
9	60-09	B	Forced Thermostat OFF	Not available	Edge
10	60-10	C	Forced Thermostat OFF	Not available	Edge
11	60-11	D	Forced Thermostat OFF	Not available	Edge

Mode	Function setting	External input and output PCB (Rotary SW)	External output		
			External input and output PCB		
			CN310	CN311	CN312
0-1	60-00	1	Operation/Stop	Error status	Indoor unit fan operation status
0-2	60-00	2	Error status	Indoor unit fan operation status	Not available
1—8	60-01 to 60-08	3 - 9, A	(Setting prohibited)		
9	60-09	B	Operation/Stop	Indoor unit fan operation status	Not available
10	60-10	C	Operation/Stop	Error status	Not available
11	60-11	D	Operation/Stop	Indoor unit fan operation status	Error status

NOTE: Input of Operation/Stop depends on the setting of function setting 46.
00: Operation/Stop mode 1 (R.C. enabled)
01: (Setting prohibited)
02: Forced stop
03: Operation/Stop mode 2 (R.C. disabled)

WALL MOUNTED
ASHG07-14KGT

■ Input signal type

External input and output PCB:

The input signal type can be selected.

Signal type (edge or pulse) can be switched by the DIP switch SW302 on the External input and output PCB.

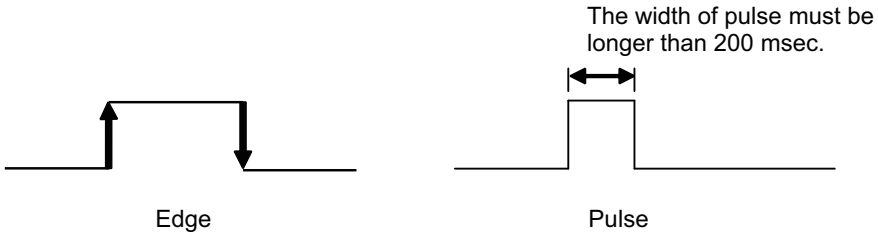

WALL MOUNTED
ASHG07-14KGT

8-4. Details of function

■ Control input function

- **When function setting is "Operation/Stop" mode 1**
  - In the case of "Edge" input:

Function setting /		Rotary SW on External input and output PCB	External input		Input signal	Command
46-00	60-00 / 1		External input and output PCB	CN313	Off → On	Operation
					On → Off	Stop

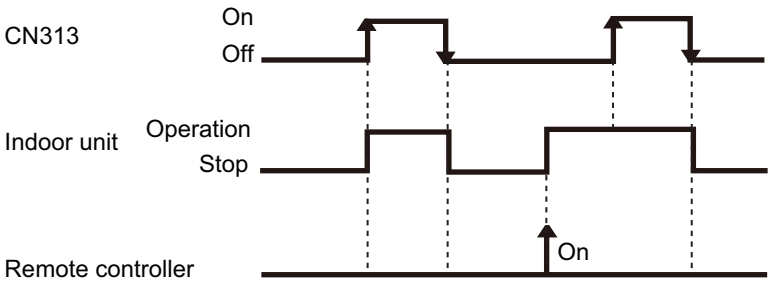

  - In the case of "Pulse" input:

Function setting /		Rotary SW on External input and output PCB	External input		Input signal	Command
46-00	60-00 / 1		External input and output PCB	CN313	Pulse	Operation
				CN314	Pulse	Stop

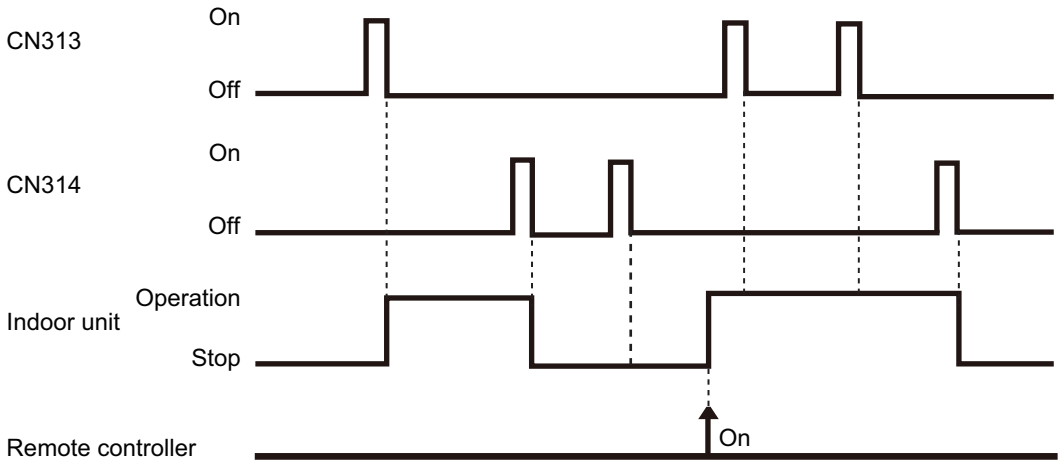

NOTES:

- The last command has priority.
- The indoor units within the same remote controller group operates in the same mode.

- **When function setting is "Forced stop" mode**
  - In the case of "Edge" input:

Function setting /		Rotary SW on External input and output PCB	External input		Input signal	Command
46-02	60-00 / 1		External input and output PCB	CN313	Off → On	Forced stop
					On → Off	Normal

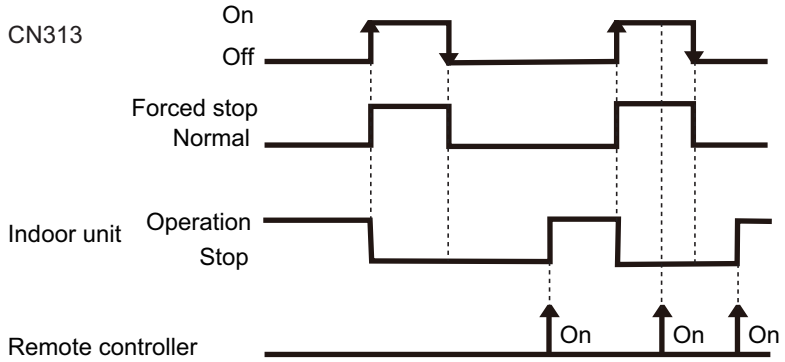

  - In the case of "Pulse" input:

Function setting /		Rotary SW on External input and output PCB	External input		Input signal	Command
46-02	60-00 / 1		External input and output PCB	CN313	Pulse	Forced stop
				CN314	Pulse	Normal

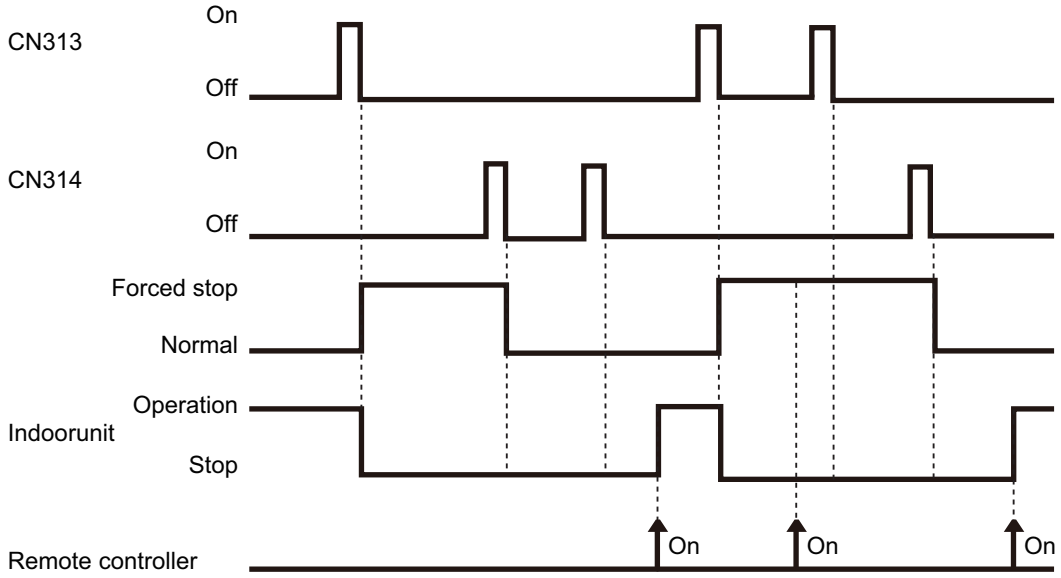

NOTES:

- When the forced stop is triggered, indoor unit stops and Operation/Stop operation by the remote controller is restricted.
- When forced stop function is used with forming a remote controller group, connect the same equipment to each indoor unit within the group.

- **When function setting is "Operation/Stop" mode 2**
  - In the case of "Edge" input:

Function setting /	Rotary SW on External input and output PCB	External input		Input signal	Command
46-03	60-00 / 1	External input and output PCB	CN313	Off → On	Operation
				On → Off	Stop (R.C. disabled)

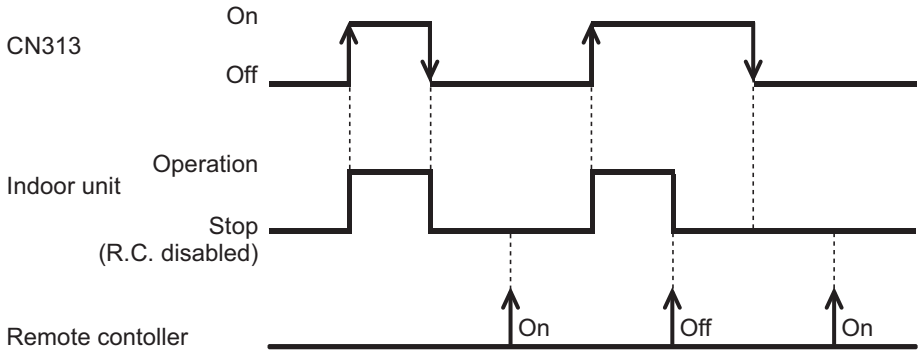

  - In the case of "Pulse" input:

Function setting /	Rotary SW on External input and output PCB	External input		Input signal	Command
46-03	60-00 / 1	External input and output PCB	CN313	Pulse	Operation
			CN314	Pulse	Stop (R.C. disabled)

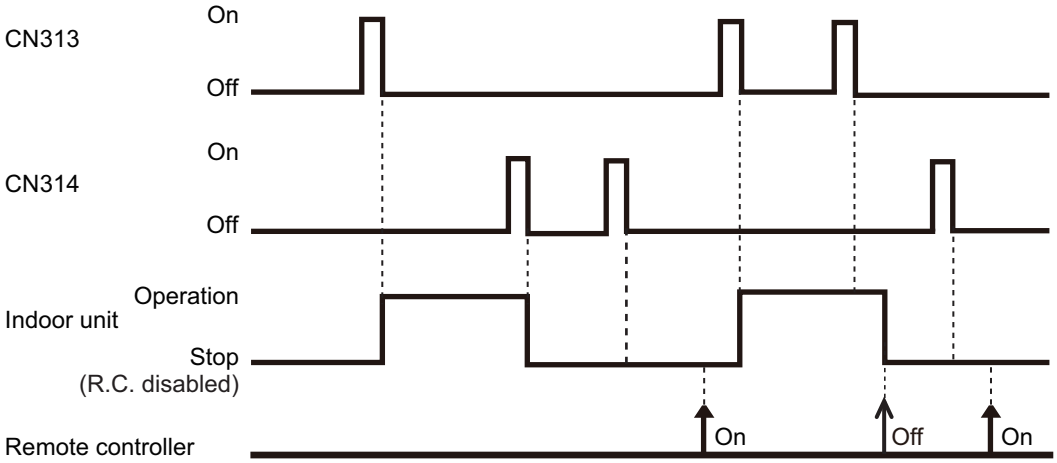

NOTE: When "Operation/Stop" mode 2 function is used with forming a remote controller group, connect the same equipment to each indoor unit within the group.

WALL MOUNTED
ASHG07-14KGT

- **Forced thermostat off function**

Function setting /	Rotary SW on External input and output PCB	External input		Input signal	Command
60-00 / 2 60-09 / B 60-10 / C		External input and output PCB	CN313	Off → On	Thermostat off
				On → Off	Normal operation

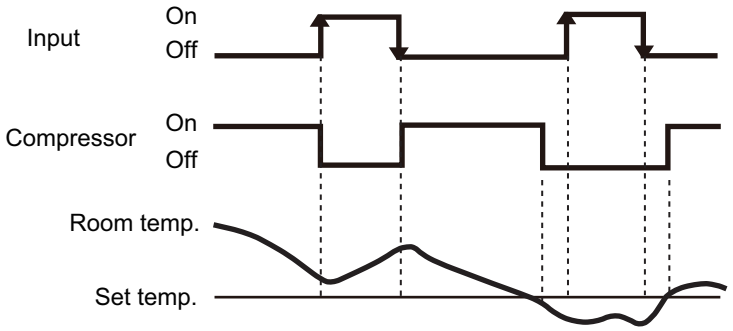

WALL MOUNTED
ASHG07-14KGT

■ Control output function

- **Operation/Stop status**

Function setting /	Rotary SW on External input and output PCB	External output		Output signal	Command
60-00 / 1		External input and output PCB	CN310	Off → On	Operation
				On → Off	Stop

The output is low when the unit is stopped.

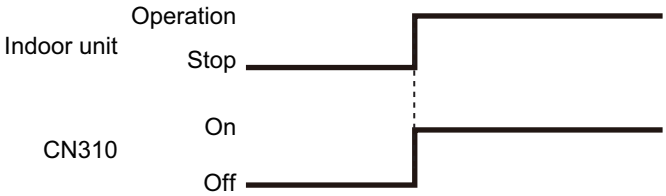

- **Error status**

Function setting /	Rotary SW on External input and output PCB	External output		Output signal	Command
60-00 / 1		External input and output PCB	CN311	Off → On	Error
				On → Off	Normal

The output is ON when an error is generated for the indoor unit.

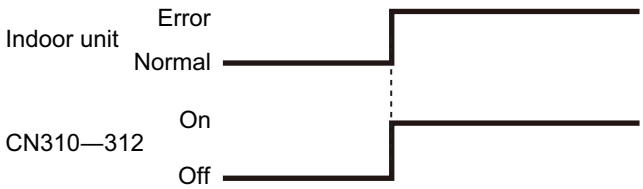

- **Indoor unit fan operation status**

Function setting /	Rotary SW on External input and output PCB	External output		Output signal	Command
60-00 / 1		External input and output PCB	CN312	Off → On	Fan run
				On → Off	Fan stop

Output signal	Condition
On Low → High	The indoor unit fan is operating.
Off High → Low	The fan is stopped or during cold air prevention. During thermostat off when in dry mode operation.

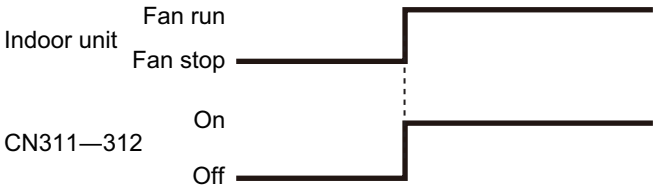

WALL MOUNTED
ASHG07-14KGT

9. Group connection

Installation procedure for group control system:

A number of indoor units can be operated at the same time using a single remote controller.

NOTE: When different type of indoor units (such as wall mounted type and cassette type, cassette type and duct type, or other combinations) are connected using group control system, some functions may no longer be available.

1. Connect up to 16 indoor units in a system.

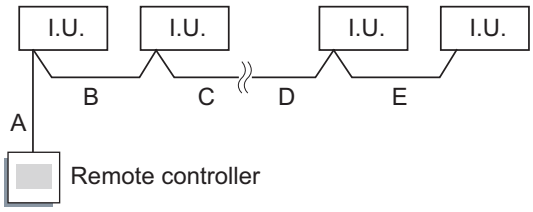

A, B, C, D, E: Remote controller cable	
Wiring length limitation	A + B + C + D + E ≤ 500 m

Example of wiring method

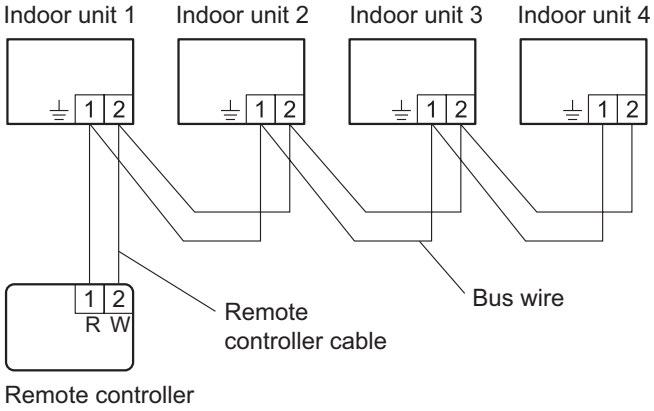

2. Set the R.C. address. (Function setting)
   - Addresses will be automatically set when initially starting up this unit. In such a case, do not change the remote controller address for the indoor unit, and keep it at the initial setting of “00”.
   - Only set addresses manually when using different numbers for addresses.
     Set the R.C. address of each indoor unit using the function setting. (Refer to “Remote controller address setting” in "Contents of function setting" on page 35.)

     NOTES:
     – Do not use the same setting value.
     – Setting is reflected after the power is turned on again.

     Also set the R.C. address for the remote controller. For details, refer to the remote controller installation manual.

     NOTE: In manual setting, connect up to 15 indoor units in a system.

Example of wiring method

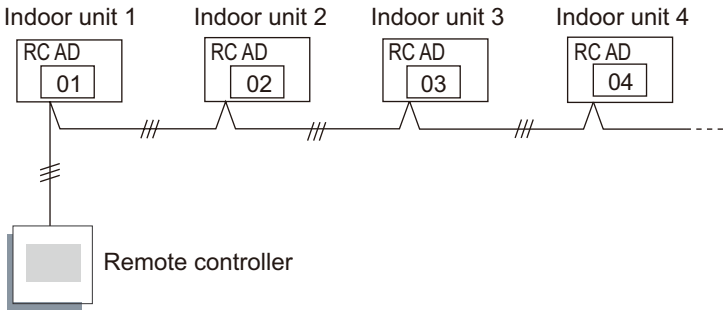

10. Remote controller

10-1. Wireless remote controller

■ Overview

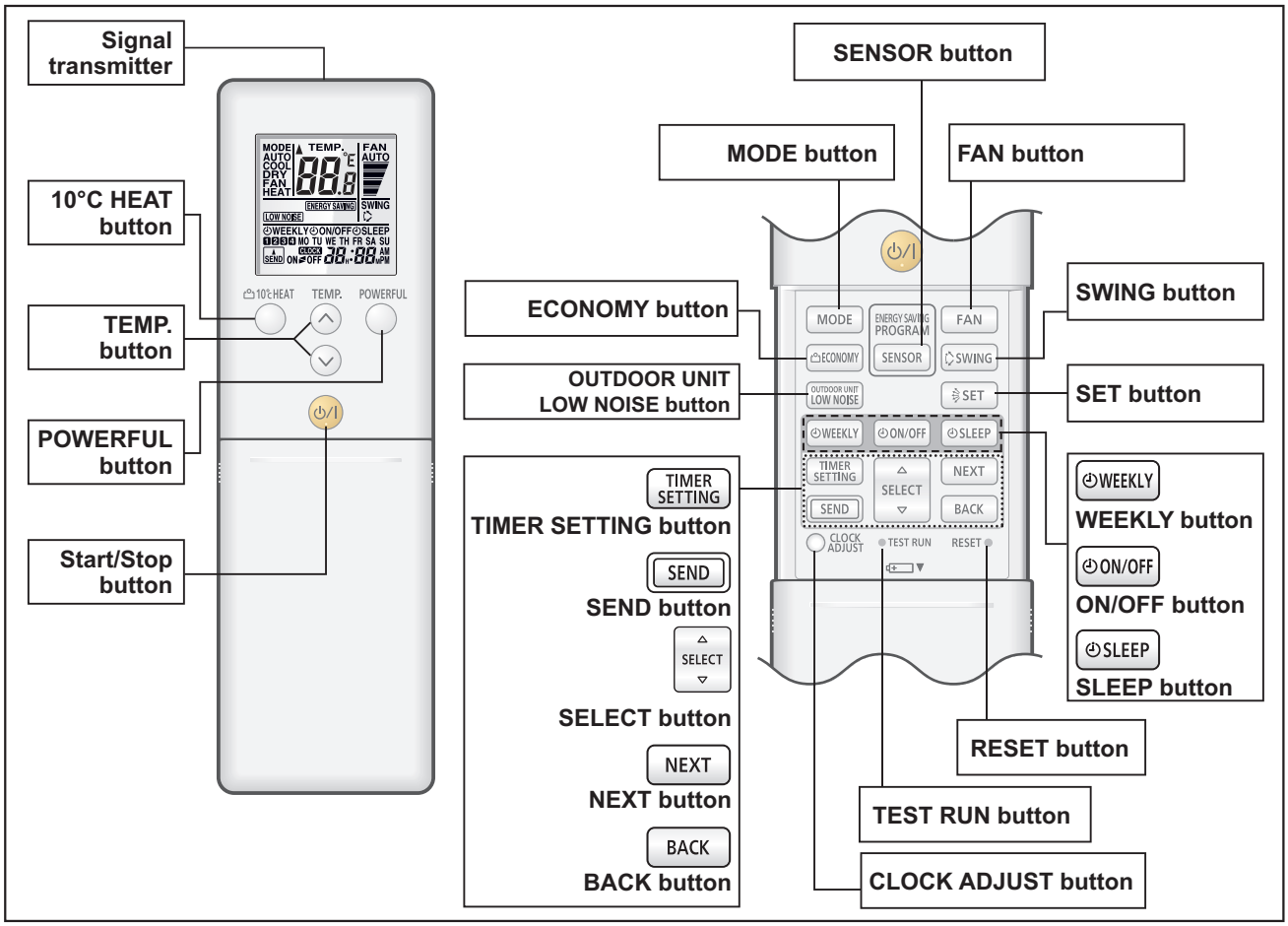

NOTE: Functions may differ by type of the indoor unit. For details, refer to the operation manual.

Display panel

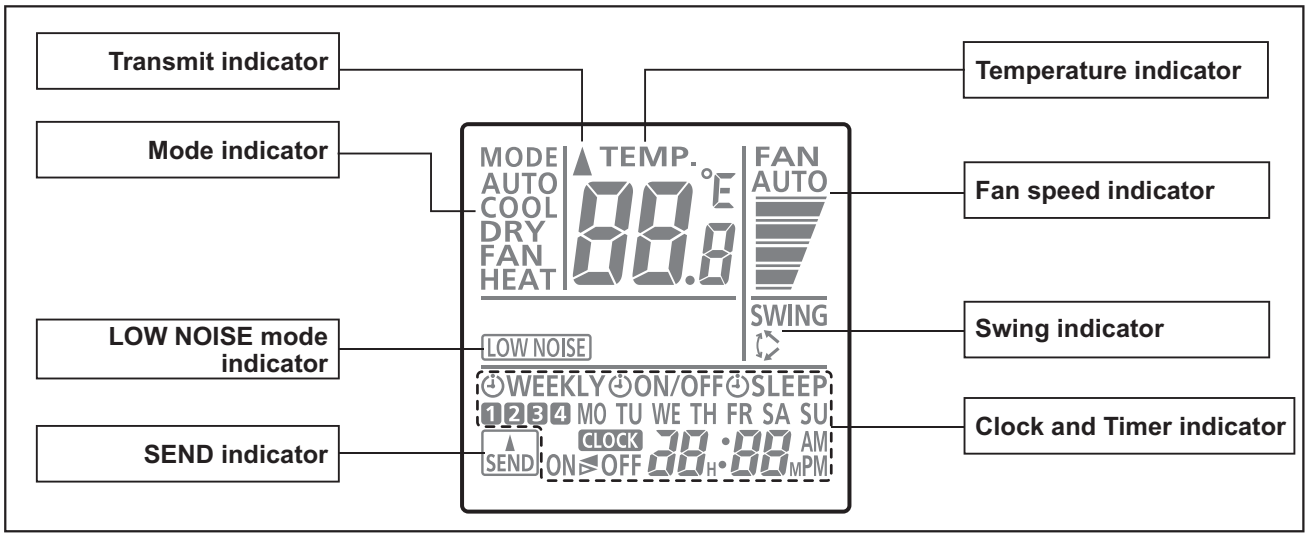

To facilitate explanation, the accompanying illustration has been drawn to show all possible indicators; in actual operation, however, the display will only show those indicators appropriate to the current operation.

WALL MOUNTED
ASHG07-14KGT

■ Specifications

● Controller

Unit: mm

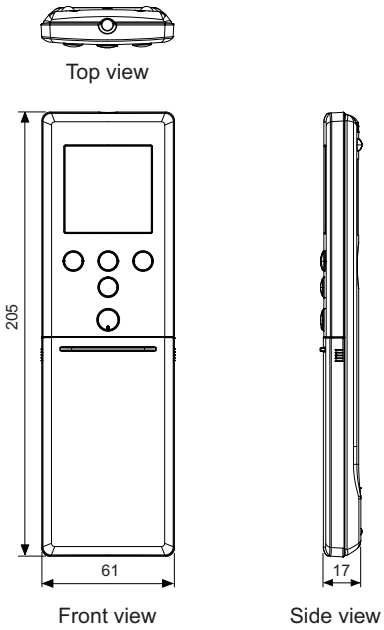

Size (H × W × D)	mm	205 × 61 × 17
Weight	g	124 (without batteries)

● Holder

Unit: mm

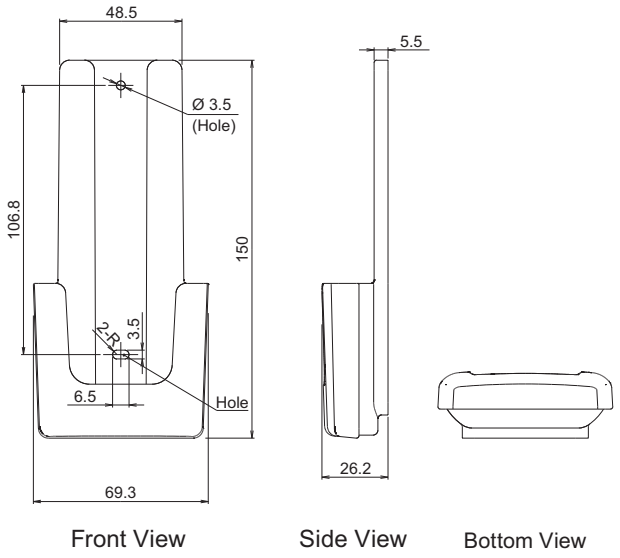

Size (H × W × D)	mm	150 × 69.3 × 26.2
Weight	g	27

WALL MOUNTED
ASHG07-14KGT

11. Function settings

To adjust the functions of this product according to the installation environment, various types of function settings are available.

NOTE: Incorrect settings can cause a product malfunction.

11-1. Function settings by using remote controller

Some function settings can be changed on the remote controller. After confirming the setting procedure and the content of each function setting, select appropriate functions for your installation environment.

■ Setting procedure by using wireless remote controller

The function number and the associated setting value are displayed on the LCD of the remote controller. Follow the instructions written in the local setup procedure supplied with the remote controller, and select appropriate setting according to the installation environment.

Before connecting the power supply of the indoor unit, reconfirm following items:

- Cover for the electrical enclosure on the outdoor unit is in place.
- There is no wiring mistake.
- Piping air tight test and vacuuming have been performed firmly.
- All the necessary wiring work for outdoor unit has been finished.

After reconfirming the items listed above, connect the power supply of the indoor unit.

NOTES:

- Settings will not be changed if invalid numbers or setting values are selected.
- When optional wired remote controller is used, refer to the installation manual enclosed with the remote controller.

Entering function setting mode:

While pressing the POWERFUL button and TEMP. (∧) button simultaneously, press the RESET button to enter the function setting mode.

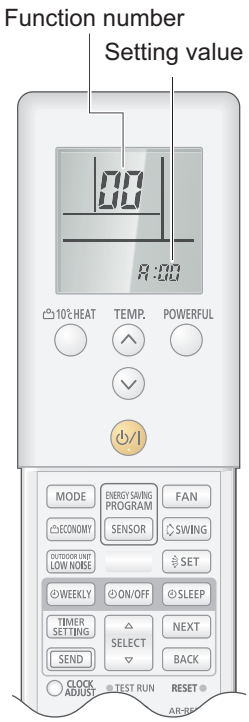

Selecting the function number and setting value:

1. Press the TEMP. (∧) (∨) buttons to select the function number. To switch between the left and right digits, press the 10 °C HEAT button.
2. Press the POWERFUL button to proceed to value setting. To return the function number selection, press the POWERFUL button again.
3. Press the TEMP. (∧) (∨) buttons to select the setting value. To switch between the left and right digits, press the 10 °C HEAT button.
4. Press the MODE button once. Confirm that you hear the beep sound.
5. Press the START/STOP button to fix the function setting. Confirm that you hear the beep sound.
6. Press the RESET button to end the function setting mode.
7. After completing the function setting, be sure to disconnect the power supply and then reconnect it.

⚠ CAUTION

After disconnecting the power supply, wait 30 seconds or more before reconnecting it. The function setting will not become active unless the power supply is disconnected and then reconnected.

WALL MOUNTED
ASHG07-14KGT

NOTES:

- The air conditioner custom code is set to A prior to shipment.
- If you do not know the air conditioner custom code setting, try each of the custom codes (A →b →c →d) until you find the code that operates the air conditioner.

WALL MOUNTED
ASHG07-14KGT

■ Contents of function setting

Each function setting listed in this section is adjustable in accordance with the installation environment.

NOTE: Setting will not be changed if invalid numbers or setting values are selected.

● Function setting list

	Function no.	Functions
1)	00	Remote controller address setting
2)	11	Filter sign
3)	30/31	Room temperature control for indoor unit sensor
4)	35/36	Room temperature control for wired remote controller sensor
5)	40	Auto restart
6)	42	Room temperature sensor switching
7)	44	Remote controller custom code
8)	46	External input control
9)	48	Room temperature sensor switching (Aux.)
10)	49	Indoor unit fan control for energy saving for cooling
11)	60	Switching functions for external output terminal

1) Remote controller address setting

NOTE: Because this setting is normally done automatically when 2-wire-type wired remote controller is installed, setting is unnecessary.

Multiple indoor units can be operated by using one wired remote controller.

Set the unit number of each indoor unit.

Function number	Setting value	Setting description	Factory setting
00	00	Unit no. 0	♦
	01	Unit no. 1	
	02	Unit no. 2	
	03	Unit no. 3	
	04	Unit no. 4	
	05	Unit no. 5	
	06	Unit no. 6	
	07	Unit no. 7	
	08	Unit no. 8	
	09	Unit no. 9	
	10	Unit no. 10	
	11	Unit no. 11	
	12	Unit no. 12	
	13	Unit no. 13	
	14	Unit no. 14	
	15	Unit no. 15	

NOTE: When different type of indoor units (such as wall mounted type and cassette type, cassette type and duct type, or other combinations) are connected using group control system, some functions may no longer be available.

WALL MOUNTED
ASHG07-14KGT

2) Filter sign

Select appropriate intervals for displaying the filter sign on the indoor unit according to the estimated amount of dust in the air of the room.

If the indication is not required, select "No indication" (03).

Function number	Setting value	Setting description	Factory setting
11	00	Standard (400 hours)	
	01	Long interval (1,000 hours)	
	02	Short interval (200 hours)	
	03	No indication	♦

3) Room temperature control for indoor unit sensor

Depending on the installed environment, correction of the room temperature sensor may be required. Select the appropriate control setting according to the installed environment.

The temperature of the room temperature sensor is corrected as follows:

Corrected temp. = Temp. of the room temp. sensor - Correction temp. value

Example of correction:

When the temperature of the room temp. sensor is 26°C and the setting value is “03” (-1.0°C), corrected temp. will be 27°C (26°C - [-1.0°C]).

The temperature correction values show the difference from the Standard setting "00" (manufacturer’s recommended value).

Function number		Setting value	Setting description		Factory setting
30 (For cooling)	31 (For heating)	00	Standard setting		♦
		01	No correction 0.0 °C		
		02	-0.5 °C	More cooling Less heating	
		03	-1.0 °C		
		04	-1.5 °C		
		05	-2.0 °C		
		06	-2.5 °C		
		07	-3.0 °C		
		08	-3.5 °C		
		09	-4.0 °C		
		10	+0.5 °C	Less cooling More heating	
		11	+1.0 °C		
		12	+1.5 °C		
		13	+2.0 °C		
		14	+2.5 °C		
		15	+3.0 °C		
		16	+3.5 °C		
		17	+4.0 °C		

WALL MOUNTED
ASHG07-14KGT

4) Room temperature control for wired remote controller sensor

Depending on the installed environment, correction of the wire remote temperature sensor may be required. Select the appropriate control setting according to the installed environment.

To change this setting, set Function 42 to Both “01”.

Ensure that the Thermo Sensor icon is displayed on the remote controller screen.

Function number		Setting value	Setting description		Factory setting
35 (For cooling)	36 (For heating)	00	Standard setting		♦
		01	No correction 0.0°C		
		02	-0.5 °C	More cooling Less heating	
		03	-1.0 °C		
		04	-1.5 °C		
		05	-2.0 °C		
		06	-2.5 °C		
		07	-3.0 °C		
		08	-3.5 °C		
		09	-4.0 °C		
		10	+0.5 °C	Less cooling More heating	
		11	+1.0 °C		
		12	+1.5 °C		
		13	+2.0 °C		
		14	+2.5 °C		
		15	+3.0 °C		
		16	+3.5 °C		
		17	+4.0 °C		

5) Auto restart

Enables or disables automatic restart after a power interruption.

Function number	Setting value	Setting description	Factory setting
40	00	Enable	♦
	01	Disable	

NOTE: Auto restart is an emergency function such as for power outage etc. Do not attempt to use this function in normal operation. Be sure to operate the unit by remote controller or external device.

6) Room temperature sensor switching

(Only for wired remote controller)

When using the wired remote controller temperature sensor, change the setting to "Both" (01).

Function number	Setting value	Setting description	Factory setting
42	00	Indoor unit	♦
	01	Both	

00: Sensor on the indoor unit is active.

01: Sensors on both indoor unit and wired remote controller are active.

NOTE: Remote controller sensor must be turned on by using the remote controller.

WALL MOUNTED
ASHG07-14KGT

7) Remote controller custom code

(Only for wireless remote controller)

The indoor unit custom code can be changed. Select the appropriate custom code.

Function number	Setting value	Setting description	Factory setting
44	00	A	♦
	01	B	
	02	C	
	03	D	

8) External input control

"Operation/Stop" mode or "Forced stop" mode can be selected.

Function number	Setting value	Setting description	Factory setting
46	00	Operation/Stop mode 1	♦
	01	(Setting prohibited)	
	02	Forced stop mode	
	03	Operation/Stop mode 2	

NOTE: If this function is necessary, the rotary switch on the External input and output PCB should be set to 1.

9) Room temperature sensor switching (Aux.)

To use the temperature sensor on the wired remote controller only, change the setting to "Wired remote controller" (01).

This function will only work if the function setting 42 is set at "Both" (01).

When the setting value is set to "Both" (00), more suitable control of the room temperature is possible by setting function setting 30 and 31 too.

Function number	Setting value	Setting description	Factory setting
48	00	Both	♦
	01	Wired remote controller	

10) Indoor unit fan control for energy saving for cooling

Enables or disables the power-saving function by controlling the indoor unit fan rotation when the outdoor unit is stopped during cooling operation.

Function number	Setting value	Setting description	Factory setting
49	00	Disable	
	01	Enable	
	02	Remote controller	♦

00: When the outdoor unit is stopped, the indoor unit fan operates continuously following the setting on the remote controller.

01: When the outdoor unit is stopped, the indoor unit fan operates intermittently at a very low speed.

02: Enable or disable this function by remote controller setting.

NOTES:

- As the factory setting, this setting is initially activated.
- Set to "00" or "01" when connecting a remote controller that cannot set the Fan control for energy saving function or connecting a network converter.
  To confirm if the remote controller has this setting, refer to the operating manual of each remote controller.

WALL MOUNTED
ASHG07-14KGT

11) Switching functions for external output terminal

Functions of the external output terminal can be switched. For details, refer to “External input and output”.

Function number	Setting value	Setting description	Factory setting
60	00	Operation status	♦
	01—08	(Setting prohibited)	
	09	Error status	
	10	Indoor unit fan operation status	
	11	(Setting prohibited)	

WALL MOUNTED
ASHG07-14KGT

11-2. Custom code setting for wireless remote controller

To interconnect the air conditioner and the wireless remote controller, assignment of the custom code for the wireless remote controller is required.

NOTE: Air conditioner cannot receive a signal if the air conditioner has not been set for the custom code.

When 2 or more air conditioners are installed in a room, and the remote controller is operating an air conditioner other than the one you wish to set, change the custom code of the remote controller to operate only the air conditioner you wish to set. (4 selections possible.)

Confirm the setting of the remote controller custom code and the function setting. If these do not match, the remote controller cannot be used to operate for the air conditioner.

1. Press the START/STOP button until only the clock is displayed on the remote controller display.
2. Press the MODE button for at least 5 seconds to display the current custom code. (Initially set to A.)
3. Press the TEMP. (∧) (∨) buttons to change the custom code between A →b →c →d. Match the code on the display to the air conditioner custom code. (Initially set to A.)
4. Press the MODE button again to return to the clock display. The custom code will be changed.

NOTES:

- If no button is pressed within 30 seconds after the custom code is displayed, the system returns to the original clock indicator. In this case, start again from step 1.
- The air conditioner custom code is set to A prior to shipment. To change the custom code, contact your retailer.
- If you do not know the assigned code for the air conditioner, try each of the custom code (A →b →c →d) until you find the code which operates the air conditioner.

12. Accessories

12-1. Models: ASHG07KGTA, ASHG09KGTA, ASHG12KGTA, ASHG14KGTA, ASHG07KGTB, ASHG09KGTB, ASHG12KGTB, and ASHG14KGTB

Part name	Exterior	Q'ty	Part name	Exterior	Q'ty
Operating manual		1	Cloth tape	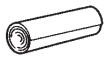	1
Operating manual (CD-ROM)	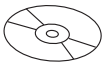	1	Tapping screw (large)	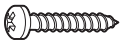	5
Installation manual		1	Tapping screw (small)		2
Remote controller	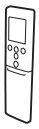	1	Wall hook bracket	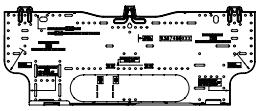	1
Battery	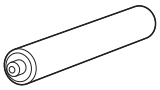	2	Filter holder		2
Remote controller holder		1	Air cleaning filters	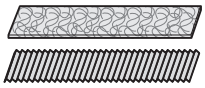	1

13. Optional parts

13-1. Controllers

Exterior	Part name	Model name	Summary
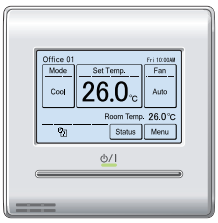	Wired remote controller	UTY-RNRGZ*	Easy finger touch operation with LCD panel. Backlit LCD enables easy operation in a dark room. Wire type: Non-polar 2-wire Optional communication kit is necessary for installation.
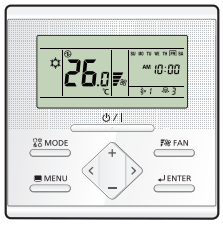	Wired remote controller	UTY-RLRG	High visibility and easy operation. Room temperature can be accurately controlled using the built-in thermo sensor. Wire type: Non-polar 2-wire Optional communication kit is necessary for installation.

NOTE: Available functions may differ by the remote controller. For details, refer to the operation manual.

13-2. Others

Exterior	Part name	Model name	Summary
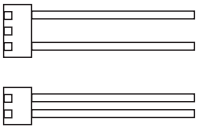	External connect kit	UTY-XWZX	Use to connect with various peripheral devices and air conditioner PCB.
	External input and output PCB	UTY-XCSXZ2	Use to connect with external devices and air conditioner PCB.
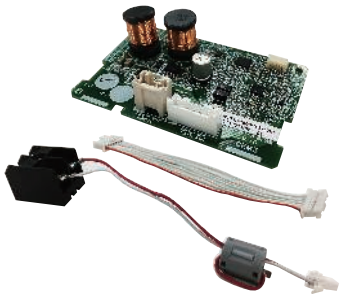	Communication kit	UTY-TWRXZ2	Use to connect Non-polar 2-core wired remote controller.
	Wireless LAN adapter	UTY-TFSXW1	Remotely manage an air conditioning system using mobile devices such as smartphones and tablets.

Part 2. OUTDOOR UNIT

SINGLE TYPE:

AOHG07KGCA
AOHG09KGCA
AOHG12KGCA
AOHG14KGCA

1. Specifications

Type				Inverter heat pump			
Model name				**AOHG07KGCA**	**AOHG09KGCA**	**AOHG12KGCA**	**AOHG14KGCA**
Power supply				230 V ~ 50 Hz			
Available voltage range				198—264 V			
Starting current			A	2.8	3.5	4.8	6.4
Fan	Airflow rate	Cooling	m^3/h	1,610	1,610	1,680	1,680
		Heating		1,560	1,610	1,580	1,580
	Type × Q'ty			Propeller fan × 1			
	Motor output		W	21			
Sound pressure level *1		Cooling	dB (A)	46		50	
		Heating		46	48	50	
Sound power level		Cooling	dB (A)	61		65	
		Heating		62	63	66	
Heat exchanger type		Dimensions (H × W × D)	mm	504 × 688 × 249			
		Fin pitch		1.3			
		Rows × Stages		1.5 × 24		2 × 24	
		Pipe type		Copper			
		Fin type	Type (Material)	Corrugate (Aluminum)			
			Surface treatment	Corrosion resistance			
Compressor	Type × Q'ty			Rotary × 1			
	Motor output		W	900			
Refrigerant		Type (Global warming potential)		R32 (675)			
		Charge	g	750		850	
Refrigerant oil		Type		RB68A			
		Amount	cm^3	340			
Enclosure		Material		Steel sheet			
		Color		Beige Approximate color of Munsell 10YR 7.5/1.0			
Dimensions (H × W × D)	Net		mm	542 × 799 × 290			
	Gross			602 × 940 × 375			
Weight	Net		kg	30		31	32
	Gross			34		35	36
Connection pipe	Size	Liquid	mm (in)	Ø 6.35 (Ø 1/4)			
		Gas		Ø 9.52 (Ø 3/8)			
	Method			Flare			
	Pre-charge length		m	15			
	Max. length			20			
	Max. height difference			15			
Operation range		Cooling	°C	-10 to 46			
		Heating		-15 to 24			
Drain hose		Material		PP+LLDPE			
		Size	mm	Ø 13.0 (I. D.), Ø 16.0 to Ø 16.8 (O. D.)			

NOTES:

- Specifications are based on the following conditions:
  - Cooling: Indoor temperature of 27 °CDB/19 °CWB, and outdoor temperature of 35 °CDB/24 °CWB.
  - Heating: Indoor temperature of 20 °CDB/15 °CWB, and outdoor temperature of 7 °CDB/6 °CWB.
  - Pipe length: 5 m, Height difference: 0 m.
- Protective function might work when using it outside the operation range.
- *1: Sound pressure level
  - Measured values in manufacturer's anechoic chamber.
  - Because of the surrounding sound environment, the sound levels measured in actual installation conditions might be higher than the specified values here.

2. Dimensions

2-1. Models: AOHG07KGCA, AOHG09KGCA, AOHG12KGCA, and AOHG14KGCA

Unit: mm

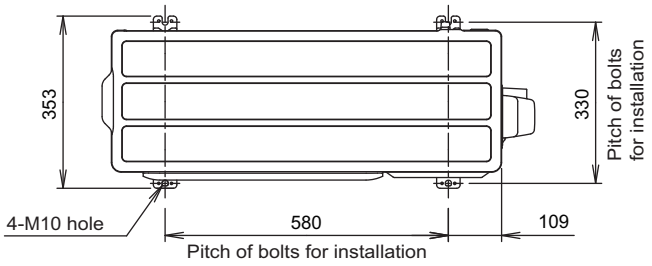

Top view

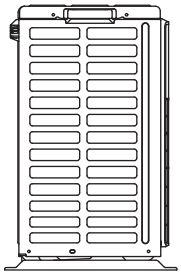

Side view

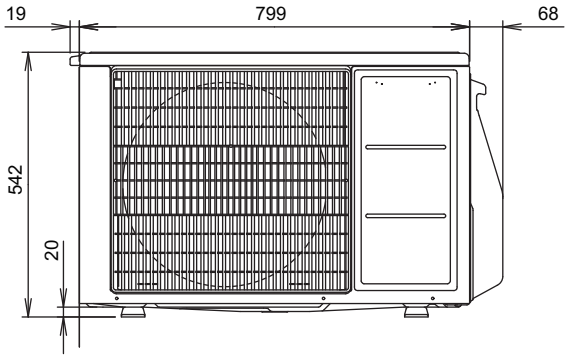

Front view

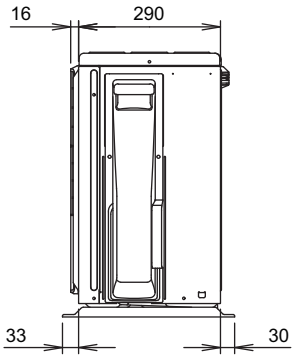

Side view

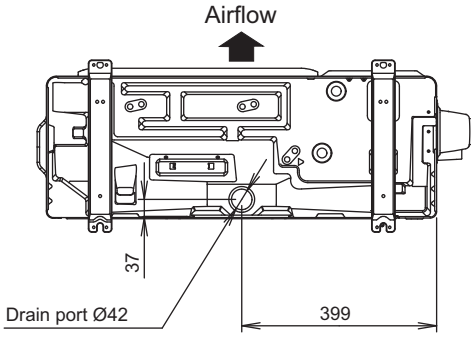

Bottom view

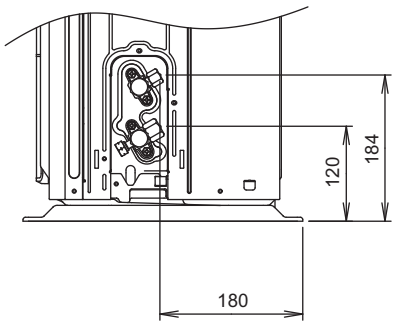

Side view (Valve part)

3. Installation space

3-1. Models: AOHG07KGCA, AOHG09KGCA, AOHG12KGCA, and AOHG14KGCA

OUTDOOR UNIT
AOHG07-14KGCA

■ Space requirement

Provide sufficient installation space for product safety.

⚠ CAUTION

Keep the space shown in the installation examples.
If the installation is not performed accordingly, it could cause a short circuit and result in a lack of operating performance.

● Single outdoor unit installation

- **When the upper space is open:**

Unit: mm

Obstacles at rear only

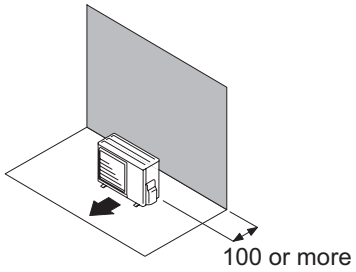

Obstacles at rear and sides

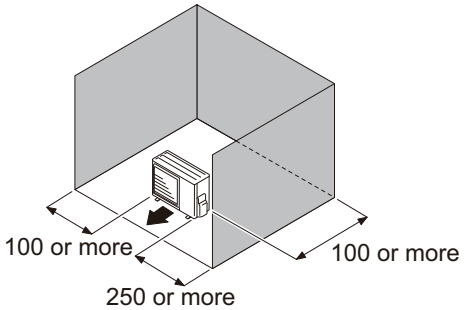

Obstacles at front

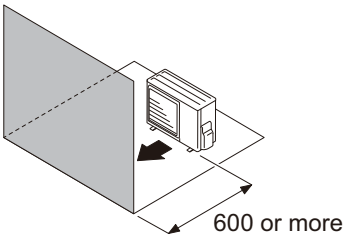

Obstacles at front and rear

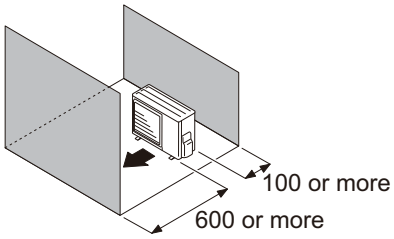

- **When there is an obstruction in the upper space:**

Unit: mm

Obstacles at rear and above

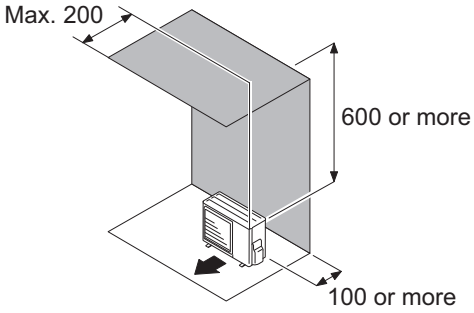

Obstacles at rear, sides, and above

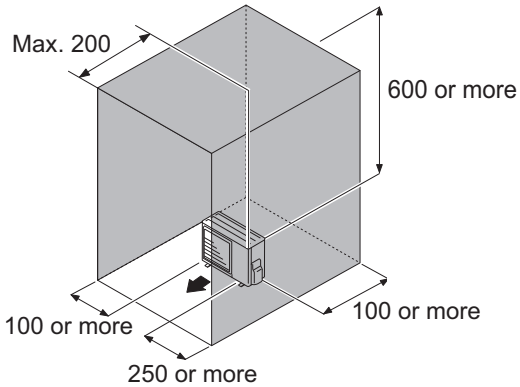

● Multiple outdoor unit installation

- Provide at least 250 mm of space between the outdoor units if multiple units are installed.
- When routing the piping from the side of an outdoor unit, provide space for piping.
- No more than 3 units must be installed side by side.
  When 3 units or more are arranged in a line, provide the space as shown in the following example "**When an obstruction in the upper space:**".

- **When the upper space is open:**

Unit: mm

Obstacles at rear only

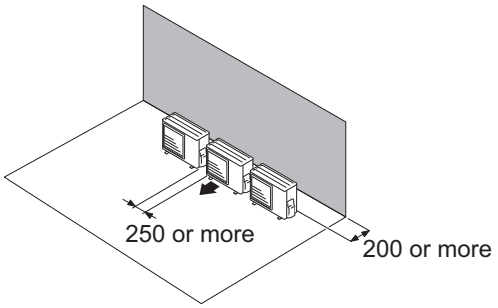

Obstacles at front only

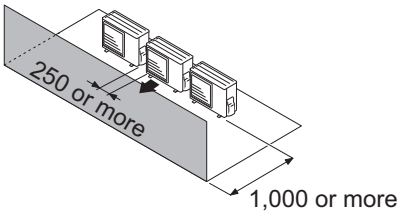

Obstacles at front and rear

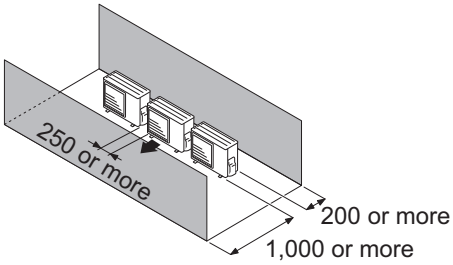

- **When an obstruction in the upper space:**

Unit: mm

Obstacles at rear and above.

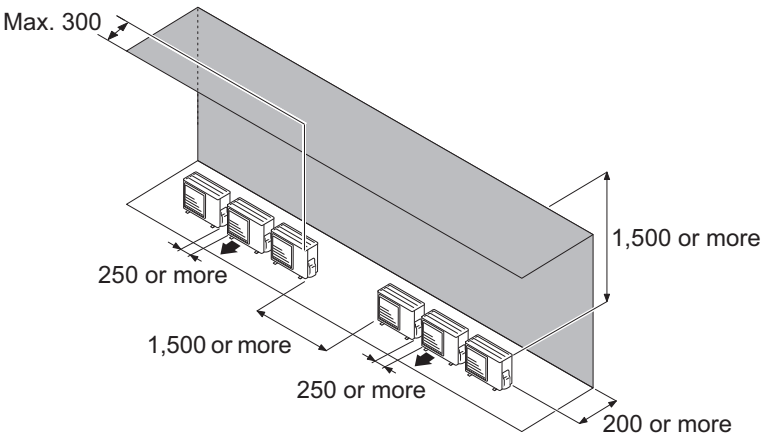

● Outdoor units installation in multi-row

Unit: mm

Single parallel unit arrangement

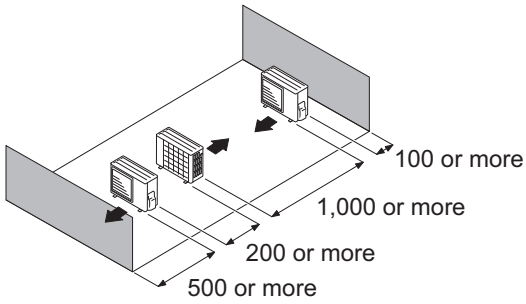

Multiple parallel unit arrangement

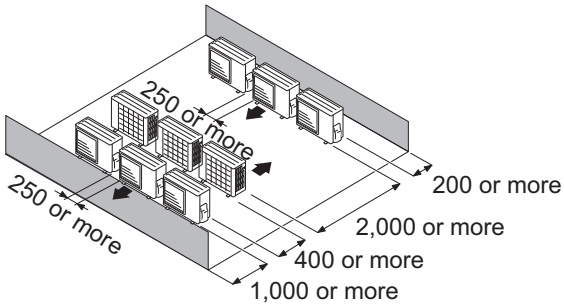

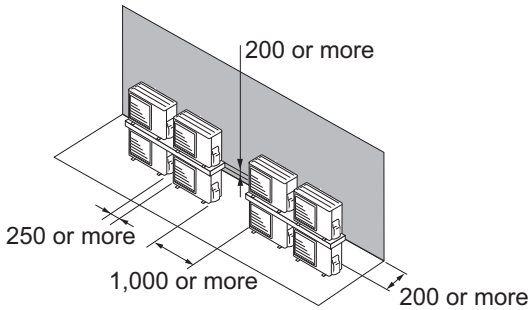

NOTES:

- If the space is larger than stated above, the condition will be the same as when there is no obstacle.
- When installing the outdoor unit, be sure to open the front and left side to obtain better operation efficiency.

⚠ CAUTION

- Do not install the outdoor unit in two-stage where the drain water could freeze. Otherwise the drainage from the upper unit may form ice and cause a malfunction of the lower unit.
- When the outdoor temperature is 0 °C or less, do not use the accessory drain pipe and drain cap. If the drain pipe and drain cap are used, the drain water in the pipe may freeze in extremely cold climate. (For reverse cycle model only.)
- In area with heavy snowfall, if the inlet and outlet of the outdoor unit is blocked with snow, it might become difficult to get warm, and it is likely to cause product malfunction. Construct a canopy and a pedestal, or place the unit on a high stand that is locally installed.

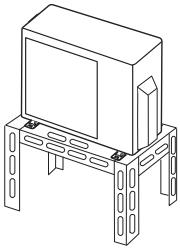

4. Refrigerant circuit

4-1. Models: AOHG07KGCA, AOHG09KGCA, AOHG12KGCA, and AOHG14KGCA

OUTDOOR UNIT
AOHG07-14KGCA

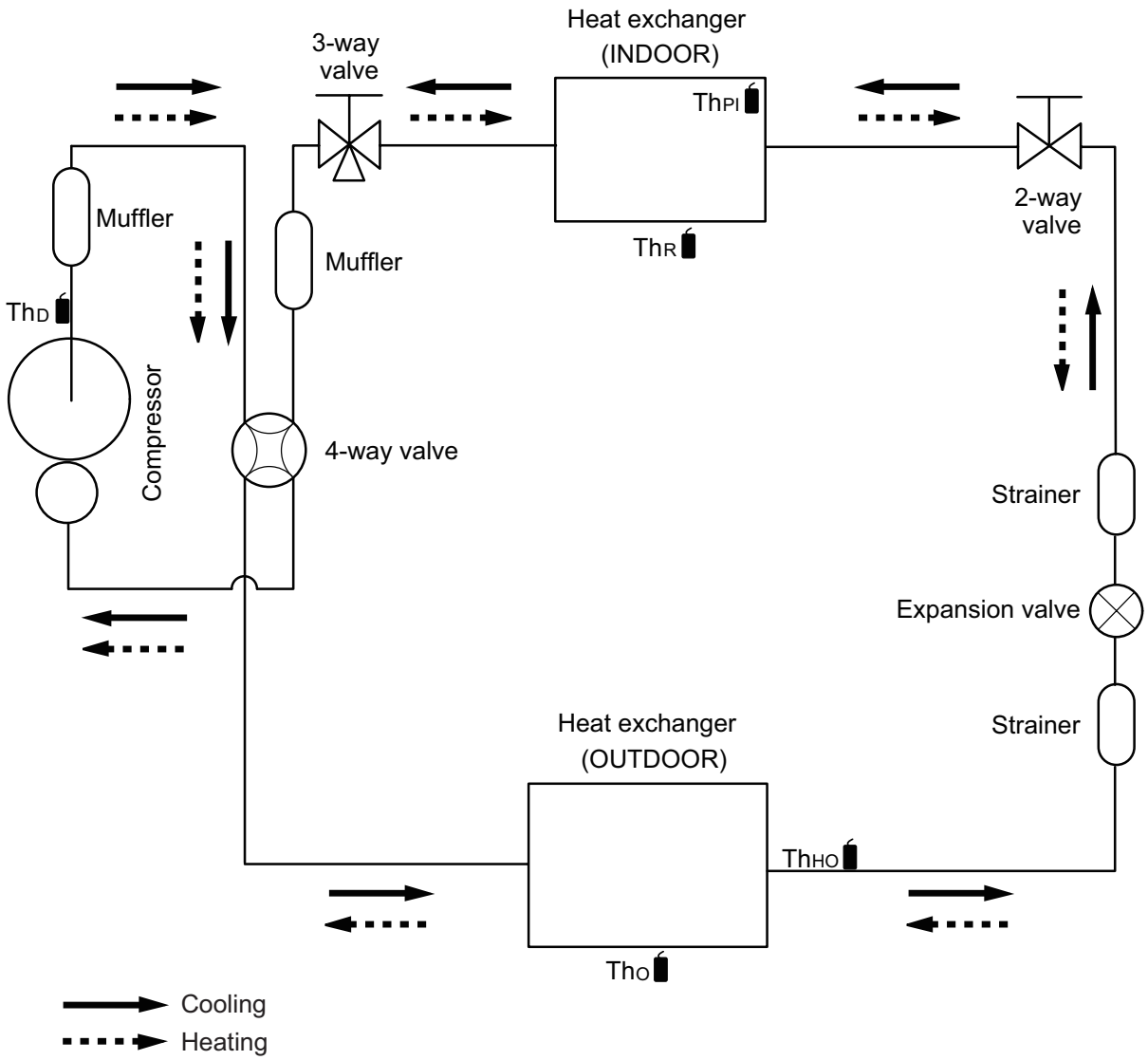

ThD : Thermistor (Discharge temperature)

ThO : Thermistor (Outdoor temperature)

ThHO: Thermistor (Heat exchanger out temperature)

ThR : Thermistor (Room temperature)

ThPI : Thermistor (Pipe temperature)

5. Wiring diagrams

5-1. Models: AOHG07KGCA, AOHG09KGCA, AOHG12KGCA, and AOHG14KGCA

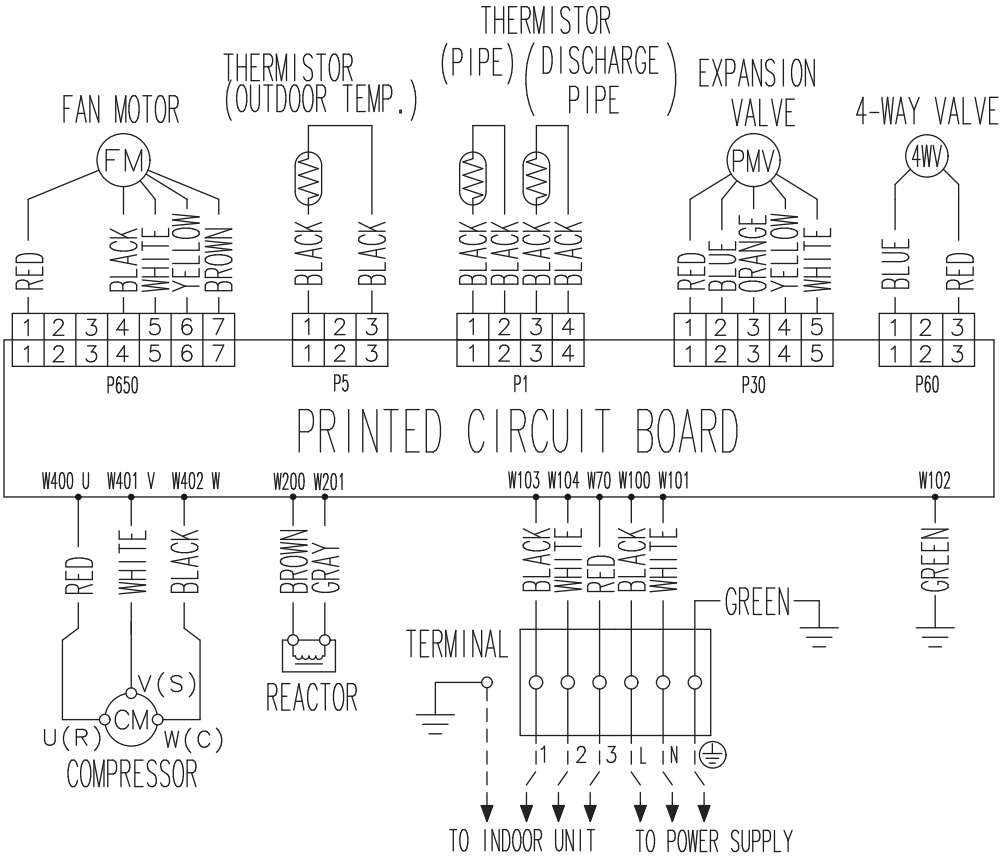

6. Capacity compensation rate for pipe length and height difference

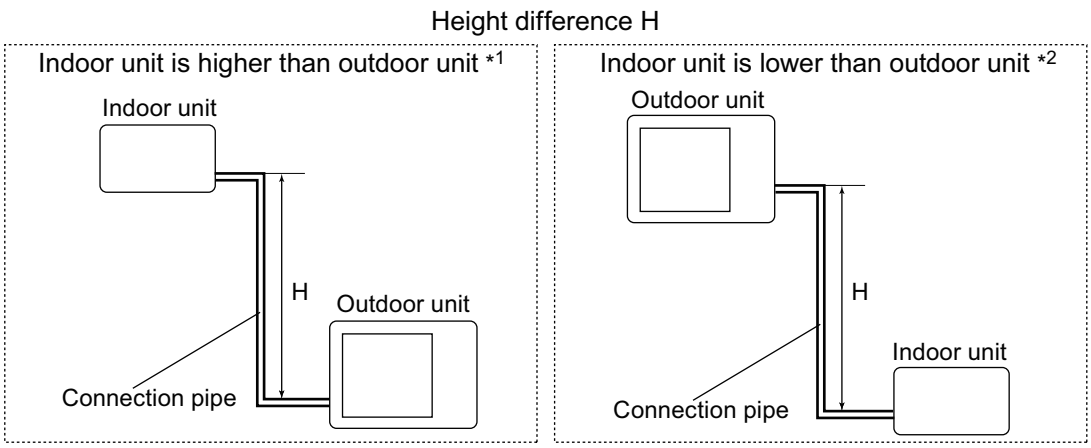

6-1. Models: AOHG07KGCA, AOHG09KGCA, AOHG12KGCA, and AOHG14KGCA

NOTE: Values mentioned in the table are calculated based on the maximum capacity.

COOLING			Pipe length (m)				
			5	7.5	10	15	20
Height difference H (m)	Indoor unit is higher than outdoor unit *1	15	—	—	—	0.858	0.868
		10	—	—	0.929	0.872	0.882
		7.5	—	0.960	0.933	0.876	0.885
		5	0.992	0.964	0.937	0.879	0.889
		0	1.000	0.972	0.944	0.887	0.896
	Indoor unit is lower than outdoor unit *2	-5	1.000	0.972	0.944	0.887	0.896
		-7.5	—	0.972	0.944	0.887	0.896
		-10	—	—	0.944	0.887	0.896
		-15	—	—	—	0.887	0.896

HEATING			Pipe length (m)				
			5	7.5	10	15	20
Height difference H (m)	Indoor unit is higher than outdoor unit *1	15	—	—	—	0.896	0.879
		10	—	—	0.968	0.890	0.879
		7.5	—	0.994	0.968	0.896	0.879
		5	1.000	0.994	0.968	0.896	0.879
		0	1.000	0.994	0.968	0.896	0.879
	Indoor unit is lower than outdoor unit *2	-5	0.995	0.989	0.963	0.891	0.875
		-7.5	—	0.987	0.961	0.889	0.873
		-10	—	—	0.959	0.887	0.871
		-15	—	—	—	0.878	0.862

7. Additional charge calculation

7-1. Models: AOHG07KGCA and AOHG09KGCA

Refrigerant type		R32
Refrigerant amount	g	750

■ Refrigerant charge

Total pipe length	m	15 or less	20 (Max.)	20 g/m
Additional charge	g	0	100	

7-2. Models: AOHG12KGCA and AOHG14KGCA

Refrigerant type		R32
Refrigerant amount	g	850

■ Refrigerant charge

Total pipe length	m	15 or less	20 (Max.)	20 g/m
Additional charge	g	0	100	

OUTDOOR UNIT
AOHG07-14KGCA

8. Airflow

8-1. Model: AOHG07KGCA

● Cooling

m^3/h	1,610
l/s	447
CFM	948

● Heating

m^3/h	1,560
l/s	433
CFM	918

8-2. Model: AOHG09KGCA

● Cooling

m^3/h	1,610
l/s	447
CFM	948

● Heating

m^3/h	1,610
l/s	447
CFM	948

8-3. Model: AOHG12KGCA

● Cooling

m^3/h	1,680
l/s	467
CFM	989

● Heating

m^3/h	1,580
l/s	439
CFM	930

8-4. Model: AOHG14KGCA

● Cooling

m^3/h	1,680
l/s	467
CFM	989

● Heating

m^3/h	1,580
l/s	439
CFM	930

OUTDOOR UNIT
AOHG07-14KGCA

9. Operation noise (sound pressure)

9-1. Noise level curve

■ Model: AOHG07KGCA

● Cooling

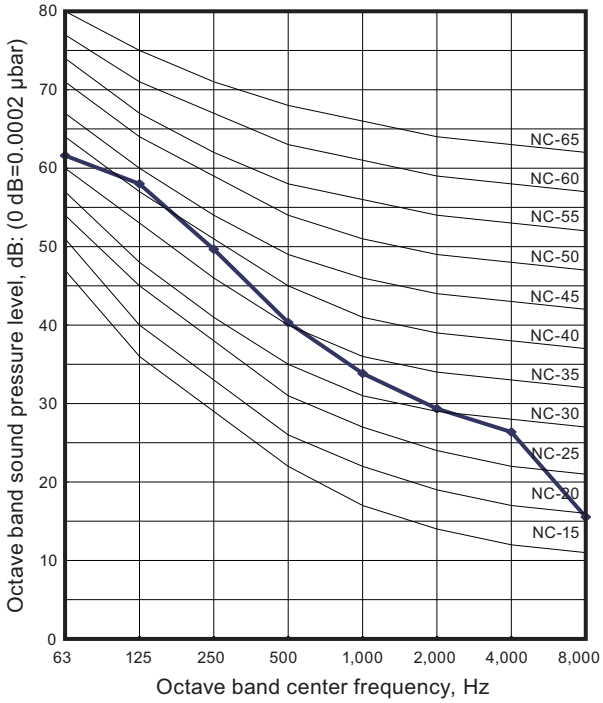

● Heating

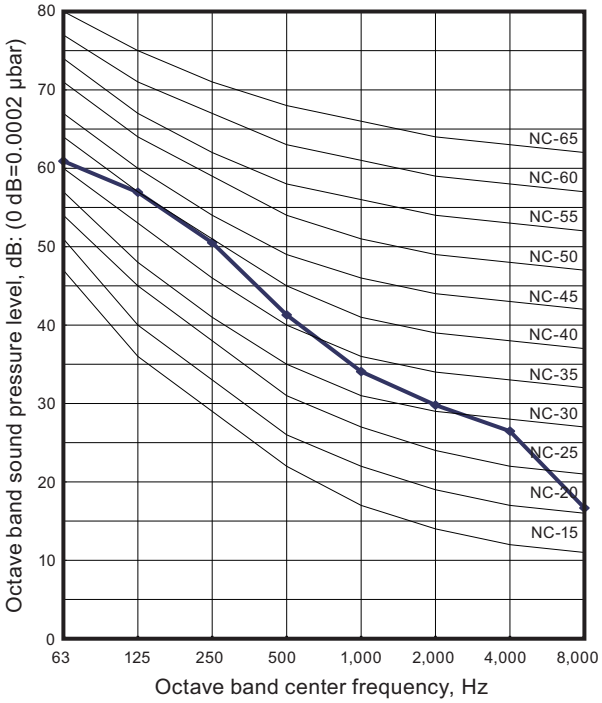

■ Model: AOHG09KGCA

● Cooling

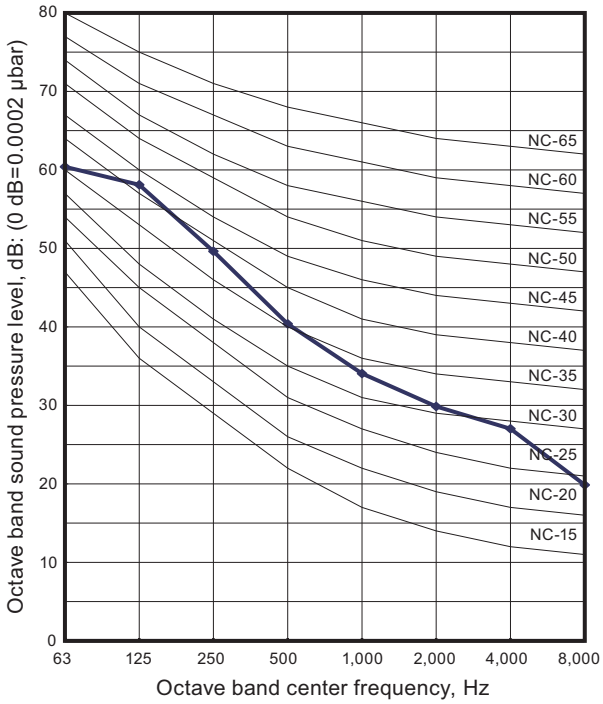

● Heating

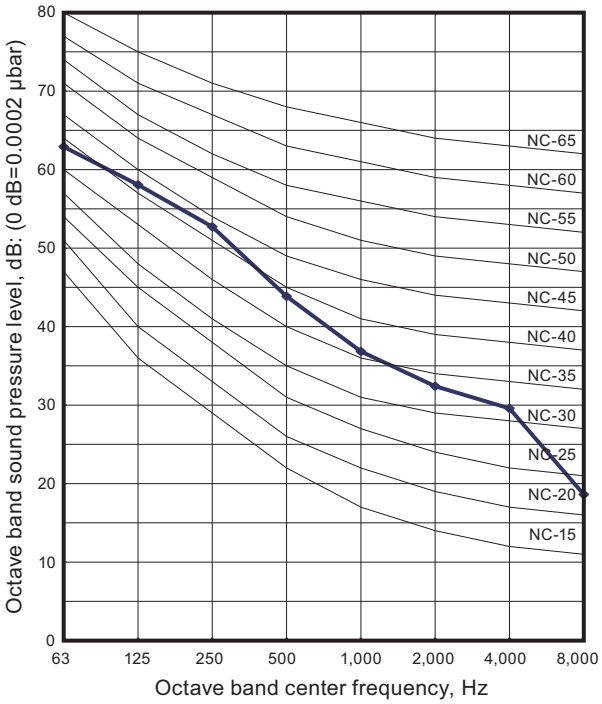

■ Model: AOHG12KGCA

● Cooling

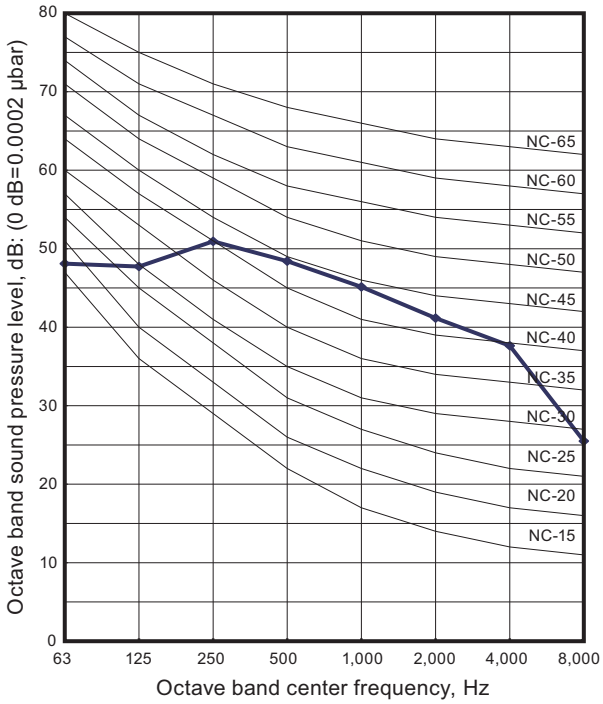

● Heating

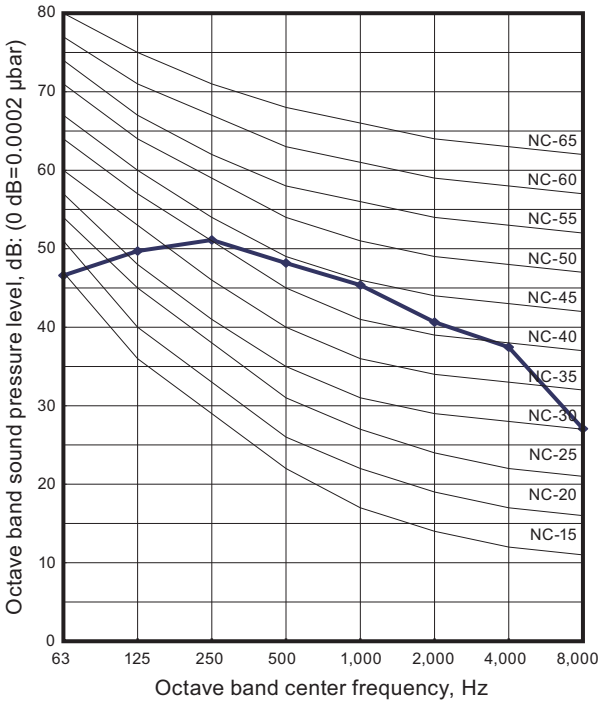

■ Model: AOHG14KGCA

● Cooling

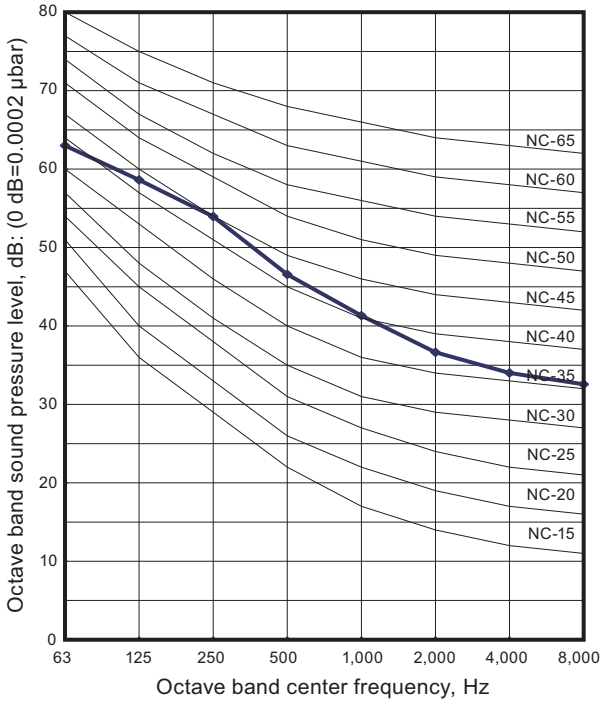

● Heating

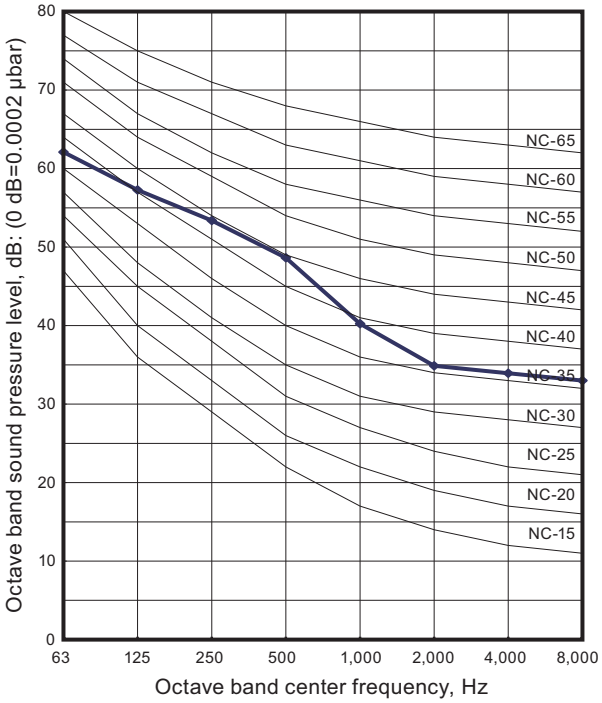

9-2. Sound level check point

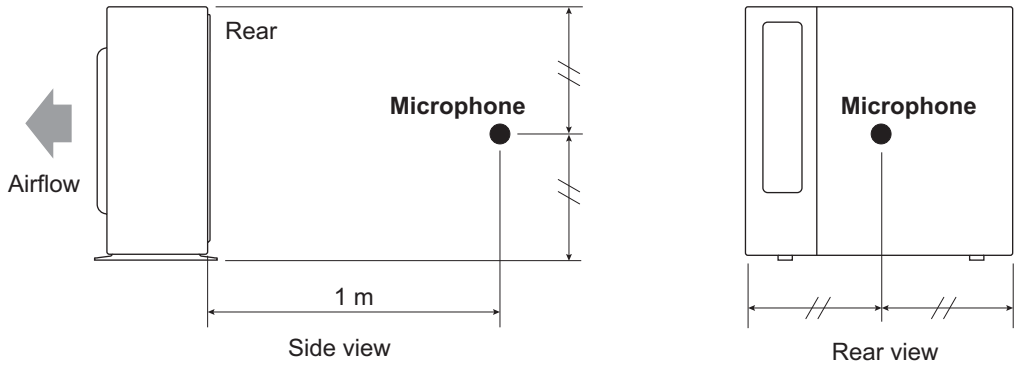

NOTE: Detailed shape of the actual outdoor unit might be slightly different from the one illustrated above.

OUTDOOR UNIT
AOHG07-14KGCA

10. Electrical characteristics

Model name			AOHG07KGCA	AOHG09KGCA	AOHG12KGCA	AOHG14KGCA
Power supply	Voltage	V	230 ~			
	Frequency	Hz	50			
Max operating current *1		A	9.0			10.5
Starting current		A	2.8	3.5	4.8	6.4
Wiring spec. *2	Circuit breaker current	A	15			
	Power cable	mm^2	1.5			
	Connection cable *3	mm^2	1.5			
	Limited wiring length	m	21			

*1: Maximum operating current is the total current of the indoor unit and the outdoor unit.

*2: Selected sample based on Japan Electrotechnical Standards and Codes Committee E0005. As the regulations of wire size and circuit breaker differ in each country or region, select appropriate devices complied to the regional standard.

*3: Limit voltage drop to less than 2%. If voltage drop is 2% or more, increase cable conductor size.

OUTDOOR UNIT
AOHG07-14KGCA

11. Safety devices

Type of protection	Protection form		Model	
			AOHG07KGCA	AOHG09KGCA
Circuit protection	Current fuse (Main PCB)		250 V, 20 A	
			250 V, 5 A	
Fan motor protection	Terminal protection program	Activate	125±25 °C Fan motor stop	
		Reset	100±25 °C Fan motor restart	
Compressor protection	Terminal protection program (Discharge temp.)	Activate	110 °C Compressor stop	
		Reset	After 7 minutes Compressor restart	

Type of protection	Protection form		Model	
			AOHG12KGCA	AOHG14KGCA
Circuit protection	Current fuse (Main PCB)		250 V, 20 A	
			250 V, 5 A	
Fan motor protection	Terminal protection program	Activate	125±25 °C Fan motor stop	
		Reset	100±25 °C Fan motor restart	
Compressor protection	Terminal protection program (Discharge temp.)	Activate	110 °C Compressor stop	
		Reset	After 7 minutes Compressor restart	

OUTDOOR UNIT
AOHG07-14KGCA

12. Accessories

12-1. Models: AOHG07KGCA, AOHG09KGCA, AOHG12KGCA, and AOHG14KGCA

Part name	Exterior	Q'ty	Part name	Exterior	Q'ty
Installation manual		1	Drain pipe		1

OUTDOOR UNIT
AOHG07-14KGCA